AN APPLICATION OF OPTIMAL CONTROL THEORY TO THE FFG-7 GAS TURBINE PROPULSION SYSTEM

Richard A. Kalyn

Thesis
K124

NAVAL POSTGRADUATE SCHOOL
Monterey, California

THESIS

AN APPLICATION OF OPTIMAL CONTROL THEORY
TO THE FFG-7 GAS TURBINE PROPULSION SYSTEM

by

Richard A. Kalyn
June 1979

Thesis Advisor: T. M. Houlihan

Approved for public release; distribution unlimited.

T 12531

unclassified

SECURITY CLASSIFICATION OF THIS PAGE (When Data Entered)

REPORT DOCUMENTATION PAGE		READ INSTRUCTIONS BEFORE COMPLETING FORM
1. REPORT NUMBER	2. GOVT ACCESSION NO.	3. RECIPIENT'S CATALOG NUMBER
4. TITLE (and Subtitle) An Application of Optimal Control Theory to the FFG-7 Gas Turbine Propulsion System		5. TYPE OF REPORT & PERIOD COVERED Master's Thesis; June 1979 6. PERFORMING ORG. REPORT NUMBER
7. AUTHOR(s) Richard A. Kalyn		8. CONTRACT OR GRANT NUMBER(s)
9. PERFORMING ORGANIZATION NAME AND ADDRESS Naval Postgraduate School Monterey, California 93940		10. PROGRAM ELEMENT, PROJECT, TASK AREA & WORK UNIT NUMBERS
11. CONTROLLING OFFICE NAME AND ADDRESS Naval Postgraduate School Monterey, California 93940		12. REPORT DATE June 1979 13. NUMBER OF PAGES 86 pages
14. MONITORING AGENCY NAME & ADDRESS(if different from Controlling Office)		15. SECURITY CLASS. (of this report) Unclassified 15a. DECLASSIFICATION/DOWNGRADING SCHEDULE

16. DISTRIBUTION STATEMENT (of this Report)

Approved for public release; distribution unlimited.

17. DISTRIBUTION STATEMENT (of the abstract entered in Block 20, if different from Report)

18. SUPPLEMENTARY NOTES

19. KEY WORDS (Continue on reverse side if necessary and identify by block number)

optimal control, gas turbine propulsion

20. ABSTRACT (Continue on reverse side if necessary and identify by block number)

An optimal integral control design program was applied to a linearized state variable model of the FFG-7 ship class gas turbine and Controllable Reversible Pitch (CRP) propeller main propulsion system. Various combinations of output parameters were investigated in an attempt to produce a feasible control design. Only one acceptable design was achieved which did not violate any physical constraints.

DD FORM 1 JAN 73 1473 EDITION OF 1 NOV 65 IS OBSOLETE
S/N 0102-014-6601 |
(Page 1)

unclassified

SECURITY CLASSIFICATION OF THIS PAGE (When Data Entered)

Approved for public release; distribution unlimited.

An Application of Optimal Control Theory to the FFG-7 Gas Turbine Propulsion System

by

Richard A. Kalyn
Lieutenant Commander, United States Navy
B.S.E., Princeton University, 1964

Submitted in partial fulfillment of the
requirements for the degree of

MASTER OF SCIENCE IN MECHANICAL ENGINEERING

from the

NAVAL POSTGRADUATE SCHOOL
June 1979

Thesis
K124
c.1

ABSTRACT

An optimal integral control design program was applied to a linearized state variable model of the FFG-7 ship class gas turbine and Controllable Reversible Pitch (CRP) propeller main propulsion system. Various combinations of output parameters were investigated in an attempt to produce a feasible control design. Only one acceptable design was achieved which did not violate any physical constraints.

TABLE OF CONTENTS

I. INTRODUCTION---------- 8

A. OBJECTIVE---------- 8

B. COMPUTER FACILITIES AND SOFTWARE UTILIZED------- 8

II. PROPULSION PLANT MODEL---------- 10

III. CONTROL SYSTEM DESIGN WITH CONSYN---------- 13

A. BASIC PHILOSOPHY---------- 13

B. PROGRAM FLOW LOGIC---------- 15

C. MODIFICATIONS TO THE ORIGINAL PROGRAM---------- 16

IV. RESULTS---------- 20

A. GENERAL---------- 20

B. SPECIFIC---------- 25

V. CONCLUSIONS AND RECOMMENDATIONS---------- 38

A. CONCLUSIONS---------- 38

B. RECOMMENDATIONS---------- 39

APPENDIX A List of CONSYN Subprograms---------- 40

APPENDIX B Propulsion Plant Data---------- 41

1. State Variable Representation at 70%, 75%, 80%, and 85% of Maximum Gas Generator Speed---------- 41

2. A, B, C, D Matrix Elements for 75% of Maximum Gas Generator Speed---------- 42

3. A, B, C, D Matrix Elements for 85% of Maximum Gas Generator Speed---------- 43

4. Scaled A, B, C, D Matrix Elements for 85% of Maximum Gas Generator Speed, Constant Bleed---------- 44

5. Physical Constraints---------- 45

APPENDIX C Derivation of Equations Required for System Simulation with CSMP----------46

APPENDIX D Rationale for Design Form Selection----------48

APPENDIX E Derivation of Scaled State Variable Data with Constant Bleed----------50

APPENDIX F Computer Output of Optimization Run for Design 6-2F----------53

LIST OF REFERENCES----------85

INITIAL DISTRIBUTION LIST----------86

LIST OF TABLES

I. Design Forms Evaluated---------- 22

II. Design Form Variations Evaluated---------- 23

III. Optimal Controller Data, Design 6-2F---------- 26

IV. Performance Data Summary for Various Designs--------- 27

V. Comparison of Initial Condition Actual Outputs with Those Predicted by the Linear Model---------- 29

LIST OF FIGURES

1. Integral Control Synthesis---------- 18

a. Original Plant---------- 18

b. Open Loop Integral Control---------- 18

c. Closed Loop Optimal Integral Control---------- 19

d. Closed Loop Optimal Output Integral Control-------- 19

2. Optimum Closed Loop Response---------- 30

a. Gas Generator Speed and Power Turbine Speed-------- 30

b. Ship Speed and Propeller Pitch to Diameter Ratio--- 31

c. Fuel Flow Rate and Stator Guide Vane Angle--------- 32

d. Combustor Outlet Temperature and Power Turbine Inlet Temperature---------- 33

e. Compressor Surge Margin and Total Discharge Pressure---------- 34

f. Power Turbine Torque and Power---------- 35

3. Open Loop Response---------- 36

a. Gas Generator Speed and Power Turbine Speed-------- 36

b. Ship Speed---------- 37

I. INTRODUCTION

A. OBJECTIVE

Advanced technology propulsion systems require a control system design that is able to achieve the desired performance at the greatest possible efficiency. One particular scheme that shows great promise in this regard is the optimum integral control design program, CONSYN, developed in Ref. 1.

This study was undertaken to examine the validity and effectiveness of applying CONSYN to the FFG-7 ship class gas turbine propulsion system model obtained from Ref. 2.

B. COMPUTER FACILITIES AND SOFTWARE UTILIZED

The above objective was implemented by simulation on the IBM 360/67 computer of the W. R. Church Computer Center at the Naval Postgraduate School. The following programming software was required:

- Various routines in the International Mathematical and Statistical Library (IMSL)
- The IBM developed Continuous System Modeling Program (CSMP)
- The Control Program for Engineering Synthesis with Constrained Function Minimization (COPES/CONMIN) developed by Garret N. Vanderplaats of the NASA Ames Research Center

The routines developed for CONSYN in Ref. 1 as modified by Ref. 3 and this study, are listed in Appendix A.

II. PROPULSION PLANT MODEL

The propulsion system for the OLIVER HAZARD PERRY (FFG-7) class patrol frigates consists of two General Electric Corporation LM2500 Marine Gas Turbines, coupled through a reduction gear to a controllable reversible pitch (CRP) propeller manufactured by the Bird-Johnson Company. Since the gas turbine is a highly non-linear device, the linearized state variable model developed in Ref. 2 is valid only for small changes from a specified steady state operating point. This model was obtained from a coupled ship and propulsion plant dynamic non-linear model consisting of the following features:

- A non-linear model of the LM2500 engine developed by General Electric.
- A non-linear model of the ship, propeller and propulsion train provided by the Bath Iron Works Company.
- Secondary flow losses considered.
- Bleed flow for extraction and turbine cooling considered.
- Inlet and exhaust losses incorporated.
- Pressure and temperature dynamics neglected.
- Nested loop balancing utilized to obtain various steady state operating points.

In matrix equation form, this linearized state variable model of the various engine and ship parameters is expressed as:

$$\dot{X} = AX + BU$$

$$Y = CX + DU$$

where

X is the system state vector, and consists of three components:

$x_1 = NG - NG_{ss}$; NG = Gas Generator Speed (rpm)

$x_2 = NPT - NPT_{ss}$; NPT = Power Turbine Speed (rpm)

$x_3 = V - V_{ss}$; V = Ship Speed (knots)

U is the system input vector, and consists of four components:

$u_1 = WF - WF_{ss}$; WF = Fuel Flow (lbm/hr)

$u_2 = \beta - \beta_{ss}$; β = Stator Guide Vane Angle (deg)

$u_3 = WB - WB_{ss}$; WB = Compressor Bleed Flow (lbm/s)

$u_4 = P/D - P/D_{ss}$; P/D = Propeller Pitch/Diam Ratio (...)

Y is the system output vector, and consists of six components:

$y_1 = SMC = SMC_{ss}$; SMC = Compressor Surge Margin (%)

$y_2 = T4 - T4_{ss}$; T4 = Combustor Outlet Temp (^{o}R)

$y_3 = QPT - QPT_{ss}$; QPT = Power Turbine Torque (ft-lbf)

$y_4 = P3 - P3_{ss}$; P3 = Compressor Total Disch Press (psia)

$y_5 = HPPT - HPPT_{ss}$; HPPT = Power Turbine Power (hp)

$y_6 = T5 - T5_{ss}$; T5 = Power Turbine Inlet Temp (^{o}R)

and the ss subscripts indicate values at a specific steady state operating point, the same point used for determination of the constant A, B, C, D matrix elements.

This study considered single engine up-power transients of 70% to 75%, and 80% to 85% of maximum gas generator speed. In both cases, the steady state operating point selected was that

for the higher power, or final condition. The necessary state variable data to accomplish this study was obtained from computer printouts generated in conjunction with Ref. 2, and is contained in Appendix B. Physical constraints on inputs and input rates are also contained in Appendix B.

III. CONTROL SYSTEM DESIGN WITH CONSYN

A. BASIC PHILOSOPHY

The CONSYN (Control Synthesis) design program presented in Ref. 1 is a further refinement of linear regulator theory developed in Ref. 4. It is based on the initial assumption that the plant dynamics can be represented by the linearized state variable matrix equations

$$\dot{X} = AX + BU$$

$$Y = CX + DU$$

where, as previously discussed, all states are perturbed from their steady state operating points. This is illustrated in block diagram form in Fig. 1a. This original plant is then augmented with integrators to achieve open loop integral control as shown in Fig. 1b. Application of linear quadratic regulator theory to this augmented system leads to the minimization of a performance or cost index, J, defined by the matrix equation

$$J = \int_0^{t_f} (Y^T Q Y + \dot{U}^T R \dot{U})\, dt$$

where Q is a constant, diagonal, positive semi-definite matrix used to weight output deviation from final values, and R is a constant, diagonal, positive definite matrix used to weight input rate deviations from final values.

The linear regulator problem solution yields an optimal state feedback regulator which follows the matrix equation control law

$$\dot{U} = Z - G_1X - G_2U$$

and is illustrated in Fig. 1c, where Z is the demand vector. Finally, in order to achieve integral control commands generated by the error between demand and output, the system shown in Fig. 1c is converted to that shown in Fig. 1d. This final system configuration has the same time response as that shown in Fig. 1c but has the added advantage of assuring zero steady state error even if system degradation alters the elements of coefficient matrices.

Since that choice of Q and R matrix elements for the solution of the linear regulator problem is arbitrary, COPES/CONMIN logic is then utilized to find the optimum Q and R which minimizes the cost index J without violating any of the imposed physical constraints.

In summary then, the CONSYN design program applies a linear regulator design form to the given output control problem using the augmented state vector

$$X_* = \left[-\frac{X}{U}\right] \quad .$$

Block diagram methods along with suitably partitioned matrices are utilized to arrive at the desired structure of the optimal control system.

B. PROGRAM FLOW LOGIC

The CONSYN design program operates in three distinct segments: Initial Design, Optimization, and Final Design Output. A summary of the significant logic and operations within each of these segments follows.

1. Initial Design

a. Input the following:

(1) A, B, C, D matrices

(2) Initial guess for appropriate Q and R matrices

(3) Initial condition X and U vectors, which are then combined to form the augmented state vector $X_* = \left[\frac{X}{U}\right]$

(4) System constraints

b. Calculate system open loop characteristics

c. Calculate P, the solution to the steady state matrix Riccati equation[1]

$$A_*^T P + PA_* - PB_* R^{-1} B_*^T P + C_*^T Q C_* = 0$$

where $A_* = \left[\begin{array}{c|c} A & B \\ \hline O & O \end{array}\right]$ $B_* = \left[\frac{O}{I}\right]$ $C_* = \left[\begin{array}{c|c} C & D \end{array}\right]$

d. Calculate G the optimal state feedback gain matrix

$$G = R^{-1} B_*^T P = \left[\begin{array}{c|c} G_1 & G_2 \end{array}\right]$$

---

[1]The detailed development of this Riccati equation and the following G, H, and L gain relationships in the partitioned matrix form is found in Refs. 1 and 4.

e. Calculate H and L the integral control gain matrices

$$[L \mid H] = G \left[\begin{array}{c|c} A & B \\ \hline EC & ED \end{array}\right]^{-1}$$

where $E = [I \mid O]$ and is required so that the number of outputs fed back for comparison with the demand vector is equal to the number of inputs.

f. Simulate time response of system.

g. Print results of all of the above.

2. Optimization

Vary Q and R matrix elements under the direction of COPES/CONMIN logic to achieve the smallest cost function value without violating any constraints.

3. Final Design Output

Print complete results of system characteristics associated with the optimum Q and R matrix elements.

Since the CONSYN program does not contain a plotting routine for system time response simulation, a separate program must be utilized. For this study, the IBM CSMP in conjunction with a VERSATEC plotter was employed. A derivation of the equations required for this simulation is contained in Appendix C.

C. MODIFICATIONS TO THE ORIGINAL PROGRAM

As discussed in Ref. 3, the following two significant modifications were made to the original CONSYN program:

- The Kleinman technique for the solution of the matrix Riccati equation in subroutine OPGAIN was replaced by an eigenvalue method.

- The fixed step integration solution in subroutine PEAK for system simulation was replaced by a variable step integration routine.

In using CONSYN with these changes for this study, difficulty was encountered with the variable step integration routine. Numerical underflows, overflows, and step size decimation were encountered to varying degrees in all attempts to use it. Consequently, the fixed step integration method was returned to subroutine PEAK, along with a logic modification to determine and print out the number of terms required for the matrix series convergence of PHI = e^{Ft}. Here, the matrix F is defined as

$$F = A_* - B_* G$$

where the matrices A_*, B_* and G are as previously defined.

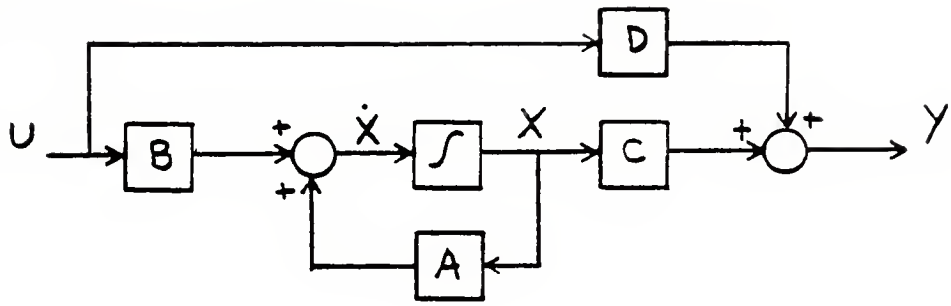

Fig. 1a. Original Plant

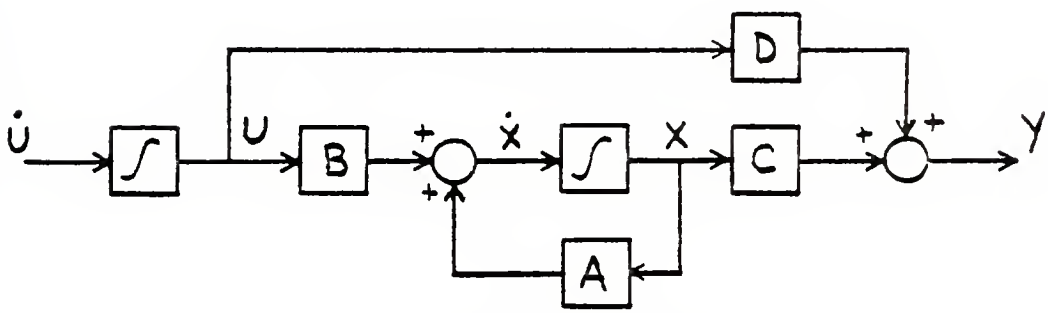

Fig. 1b. Open Loop Integral Control

Figure 1. Integral Control Synthesis

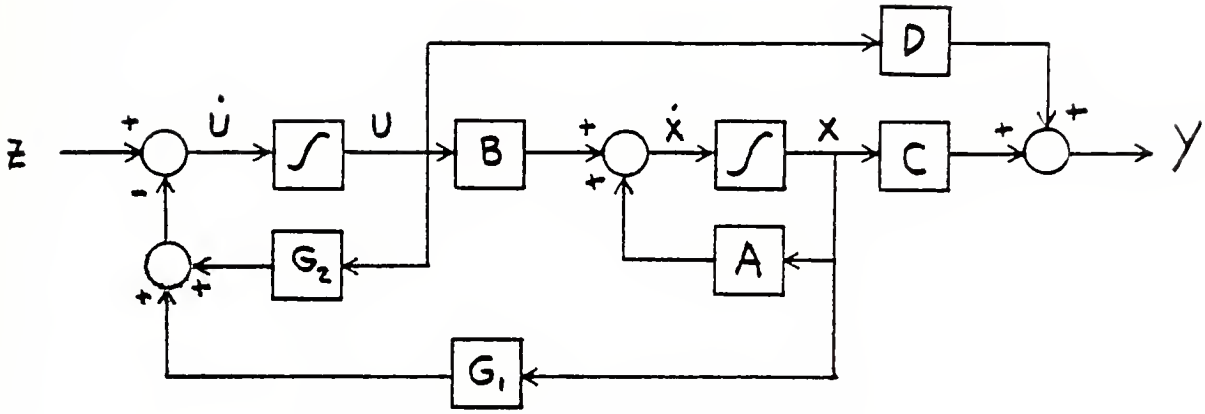

Fig. 1c. Closed Loop Optimal Integral Control

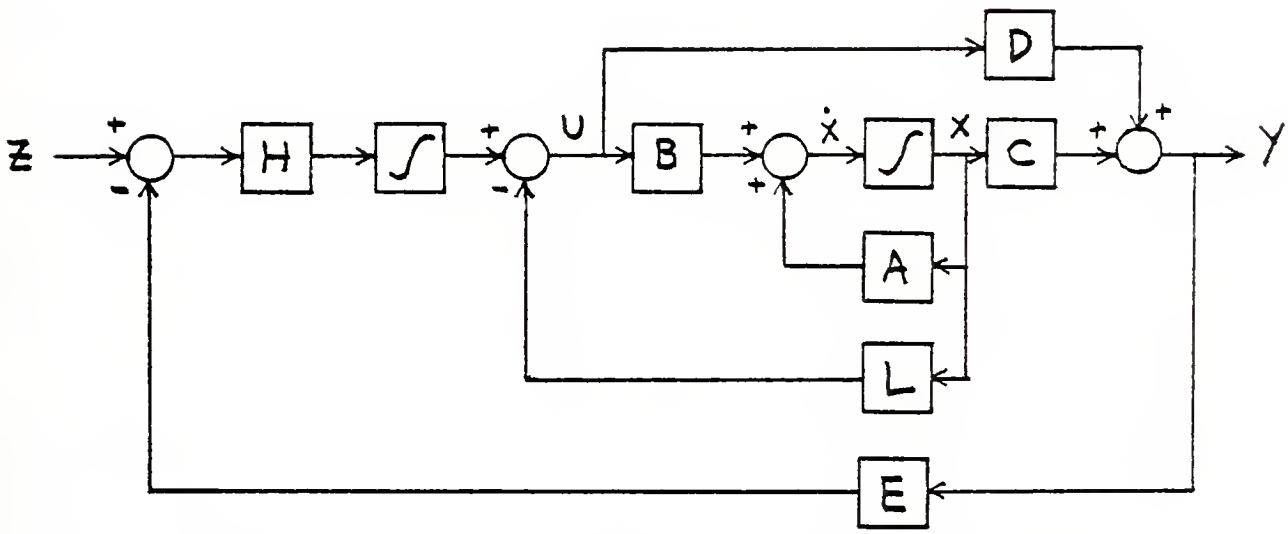

Fig. 1d. Closed Loop Optimal Output Integral Control

Figure 1. (Cont'd)

IV. RESULTS

A. GENERAL

The overall results were disappointing. Of all the basic design forms and variations evaluated, only one was found which did not violate one or more physical constraints. In addition, the study was hampered by the relatively long computer execution times required for the optimization of a single proposed design (approximately 20 minutes), and the excessively long computer turn-around times (approximately 10 hours). In all, at least 150 difference designs were attempted, with a total computer execution time expenditure of over 50 hours. A summary of the design forms and variations considered is given in Tables I and II.

Initial efforts to find an acceptable design were concentrated on design form numbers 2 and 4 in Table I. These forms were selected because they appeared to be the most analogous to the design evaluated in Ref. 5 for the F401 turbofan jet aircraft engine with respect to those outputs designated for feedback.[1] All proposed designs of these forms consisted of transients between 70% and 75% of maximum gas generator speed, variable bleed, and no state variable scaling. All variations considered resulted in violation

---

[1] See Appendix D for a more detailed discussion.

of one or more physical constraints. Examples most often noted were:

- Maximum propeller pitch exceeded
- Maximum propeller pitch rate exceeded, either in the positive or negative direction
- Negative bleed

Design form number 4 was then exercised at various transients between 80% and 85% of maximum gas generator speed with similar types of physical constraint violations.

In an effort to determine why negative bleed was sometimes occurring, G, J. Michael, one of the authors of Refs. 4 and 5 was contacted. The following information and guidance was obtained from this communication:

- Although variable bleed was used as a control in Ref. 4, it also sometimes assumed negative values due to mathematical anomalies in the engine model that could not be eliminated. As a result, bleed was not used as a control input in Ref. 5.
- Although the primary motivation for state variable scaling in Refs. 4 and 5 was to avoid publishing proprietary information in the open literature, doing so in the case of this study might eliminate additional computational anomalities.

TABLE I

DESIGN FORMS EVALUATED

	Basic Form I.D. Number					
	2	4	5	6	7	8
U =	u_1	u_1	u_1	u_1	u_1	u_1
	u_2	u_2	u_2	u_2	u_2	u_2
	u_3	u_3	u_4	u_4	u_4	u_4
	u_4	u_4				
Y =	u_2	u_2	u_2	u_2	u_2	u_1
	u_4	x_3	x_3	y_3	y_5	u_4
	y_3	y_3	y_6	y_6	y_6	x_3
	y_6	y_6	y_3	x_3	x_3	y_1
	y_1	y_1	y_1	y_1	y_1	y_2
	y_2	y_2	y_2	y_2	y_2	y_3
	y_4	y_4	y_4	y_4	y_4	y_5
	y_5	y_5	y_5	y_5	y_3	y_6

NOTE: The first n elements of the Y vector, where n is the number of inputs, are those that are to be fed back for comparison with the demand vector.

TABLE II

DESIGN FORM VARIATIONS EVALUATED

1. Initial to final Power Level, % of Maximum Gas Generator Speed:
   a. 70 - 75%
   b. 80 - 85%
2. Bleed:
   a. Variable
   b. Constant
3. Settling time - 20 to 200 seconds.
4. Ship speed constraint with respect to settling time:
   a. Within $\pm$ 2% of steady state value
   b. Not constrained
5. State variable scaling or normalization with respect to the difference between initial and final steady state values:
   a. Scaled
   b. Unscaled
6. Elements of the Q and R performance index weighting matrices allowed to be changed by the optimization routine:
   a. All Q and R elements
   b. r_1 (the weight of fuel flow rate error) fixed at 1.0, all other Q and R elements allowed to change.

Design form numbers 5, 6, 7 and 8 were then exercised at various transients between 80% and 85% of maximum gas generator speed, constant bleed, and with state variable scaling.[1] The following results were noted:

- An acceptable design which did not violate any of the input or input rate constraints was achieved with design form number 6, with the performance index weight on fuel flow rate error fixed at 1.0.
- There was no significant difference in system response obtained from design form numbers 5, 6 and 7.
- For those designs which did not impose a specification on ship speed with respect to requested settling time, the optimization routine reduced the degree of initially violated constraints during the first several interations. The remaining iterations produced no further changes in the degree of constraint violation or in the value of the objective function.
- For those designs which did impose a specification on ship speed with respect to requested settling time, the degree of initially violated constraints was reduced at the expense of violating another constraint that was not initially violated.

---

[1] See Appendix E for the derivation of the scaled state variable data with constant bleed.

- The number of terms required for the series convergence of PHI = e^{Ft} in subroutine PEAK was much less than before state variable scaling was utilized; usually fewer than ten terms were needed for convergence.

- Deviations from actual values were noted for the linearized model calculations for outputs at the initial condition. The worst occurred for power turbine power which assumed a negative value.

B. SPECIFIC

A summary of the design data associated with the one acceptable design achieved is presented in Table III. Plots of system time response simulation for this design are shown in Figures 2a through 2f. Plots of state open loop response to a step input corresponding to the final steady state input values are shown in Figures 3a and 3b. It is noted that with the optimum design, all engine parameters reached their final steady state values within 6 seconds, and the ship speed achieved 99% of its final steady state value after 100 seconds.

Summaries of performance data for various selected designs are presented in Table IV, with the degree of constraint violation indicated.

A comparison of actual output values with those predicted by the linearized model at the initial condition is given in Table V.

TABLE III

OPTIMAL CONTROLLER DATA, DESIGN 6-2F

Performance Index Weighting Factors

Output Error								Input Rate Error		
q_1	q_2	q_3	q_4	q_5	q_6	q_7	q_8	r_1	r_2	r_3
(u_2)	(y_3)	(y_6)	(x_3)	(y_1)	(y_2)	(y_4)	(y_5)	$(\dot{u}_1)$	$(\dot{u}_2)$	$(\dot{u}_4)$
.66	.37	.26	7×10^{-7}	6×10^{-8}	.56	.72	.023	1.0	.32	.28

The H Matrix

.3032	.5066	.9441
1.533	.03452	-.02609
-.1797	.9716	-.8782

The L Matrix

-.3585	-.02830	-.0006817
.1184	-.03476	-.001542
.8133	-.3113	-.2850

NOTE: The complete computer output of the optimization run for this design is contained in Appendix F.

TABLE IV

PERFORMANCE DATA SUMMARY FOR VARIOUS DESIGNS

		Design Code									
Constraint	Limit	2-1A	4-1A	4-1B	4-2B	6-2C	6-2D	6-2E	6-2F	8-2E	8-2F
WF_{max}	7600	1640	1640	1850	3860	3870	4170	3860	3860	3950	3910
WF_{min}	900	1320	1320	1320	2360	2360	2360	2360	2360	2360	2360
β_{max}	40	33.3	33.3	33.3	23.4	23.4	23.4	23.4	23.4	23.4	23.4
β_{min}	0	29.0	27.5	29.4	13.0	13.3	15.0	13.2	13.2	11.9	13.1
WB_{max}		1.61	2.54	2.03	10.4	-----constant = .02----------					
WB_{min}	0	(-1.49)	(-2.15)	.02	(-.22)	-----constant = .02----------					
P/D_{max}	1.43	(2.05)	(2.15)	(2.30)	1.43	1.43	1.43	1.43	1.43	1.43	1.43
P/D_{min}	.01	1.29	1.29	.93	1.17	1.05	.80	1.15	1.17	1.15	1.12
$\dot{WF}$	±3200	30.5	34.7	1090	1920	611	(4770)	(4650)	1880	(3810)	3180
$\dot{\beta}$	±59	-45.8	-43.3	-10.2	-12.7	-12.7	-1.8	-17.2	-16.5	-3.7	-6.2
$\dot{WB}$		11.0	19.1	2.58	246	-----constant = 0----------					
$\dot{P}/D$	±.12	(2.59)	(1.02)	(2.80)	(-2.91)	(-.72)	(-.21)	(-.17)	-.12	(-.17)	(-.35)

NOTE: Circled items indicate constraint limit exceeded. The design code used above is explained as follows:

(1st Digit) - (2nd Digit) (letter)

↑ ↑ ↑

Design form from Table I

Power Code
1 = 70-75%
2 = 80-85%

Variation Code from next page

TABLE IV (Cont'd)

	Variation Code (Also see Table II)					
	A	B	C	D	E	F
Bleed						
Variable	X	X				
Constant			X	X	X	X
State Variables						
Scaled				X	X	X
Unscaled	X	X	X			
Q and R Weights						
Variable	X	X	X	X	X	
r_1 Fixed						X
Ship Speed						
Constrained		X	X	X		
Unconstrained	X				X	X

TABLE V

COMPARISON OF INITIAL CONDITION ACTUAL OUTPUTS WITH THOSE COMPUTED BY THE LINEAR MODEL

Output	Actual Value[1]	Computed Value
SMC	32.39	30.00
T4	1776	1853
QPT	9706	8182
P3	98.53	91.09
HPPT	3219	-1795
T5	1316	1365

[1]Obtained from data generated in conjunction with Ref. 2.

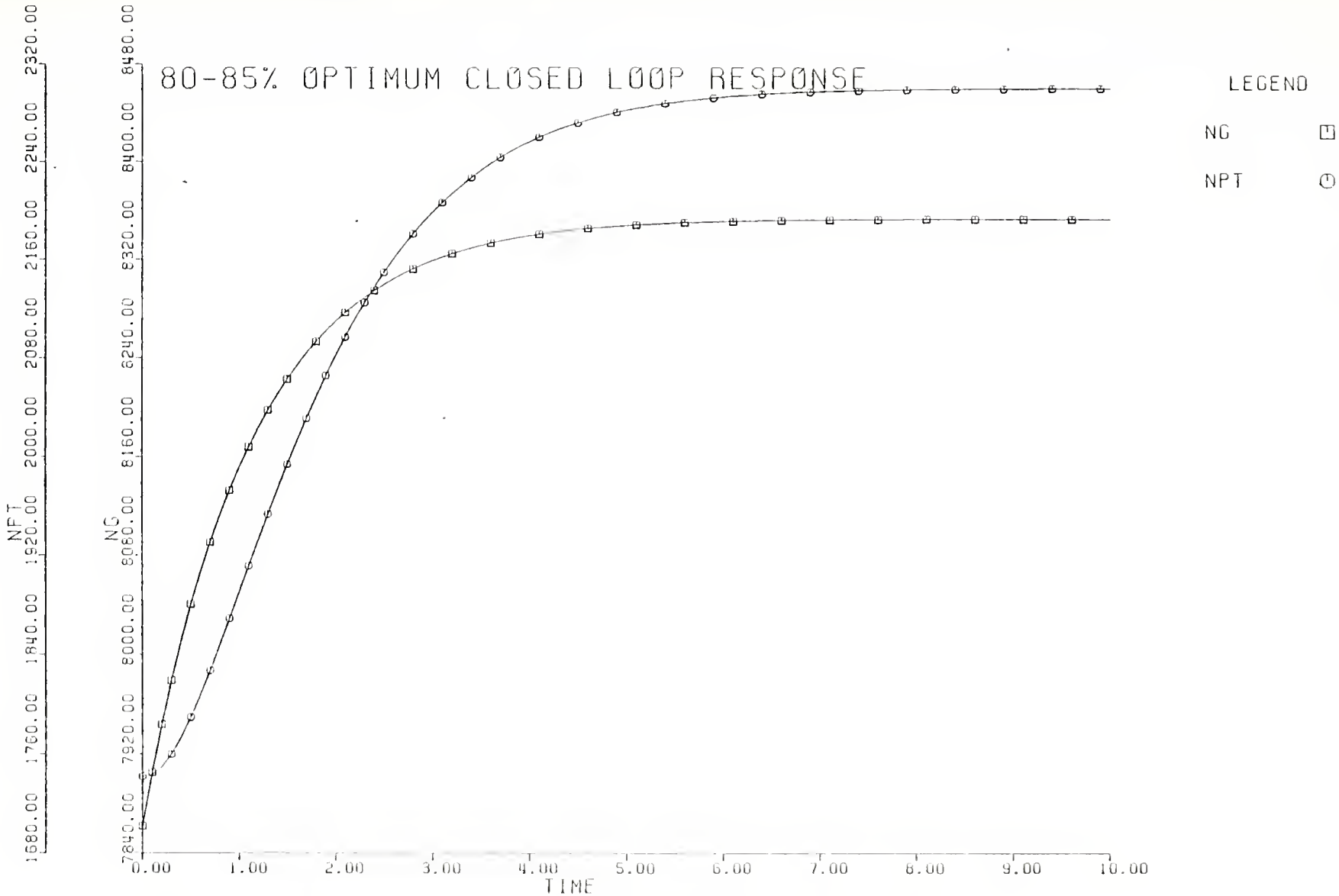

Figure 2a. Gas Generator Speed and Power Turbine Speed

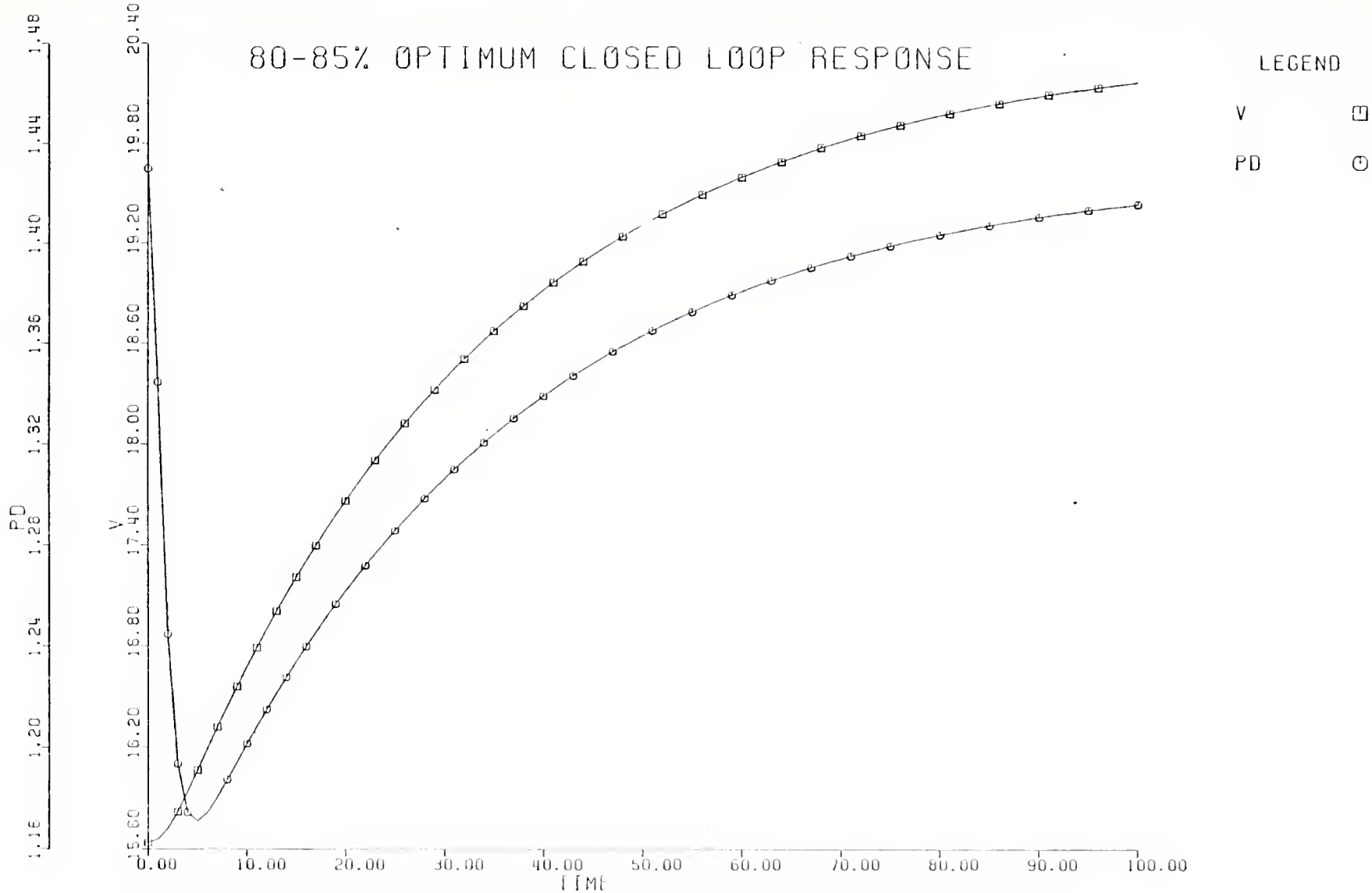

Figure 2b. Ship Speed and Propeller Pitch to Diameter Ratio

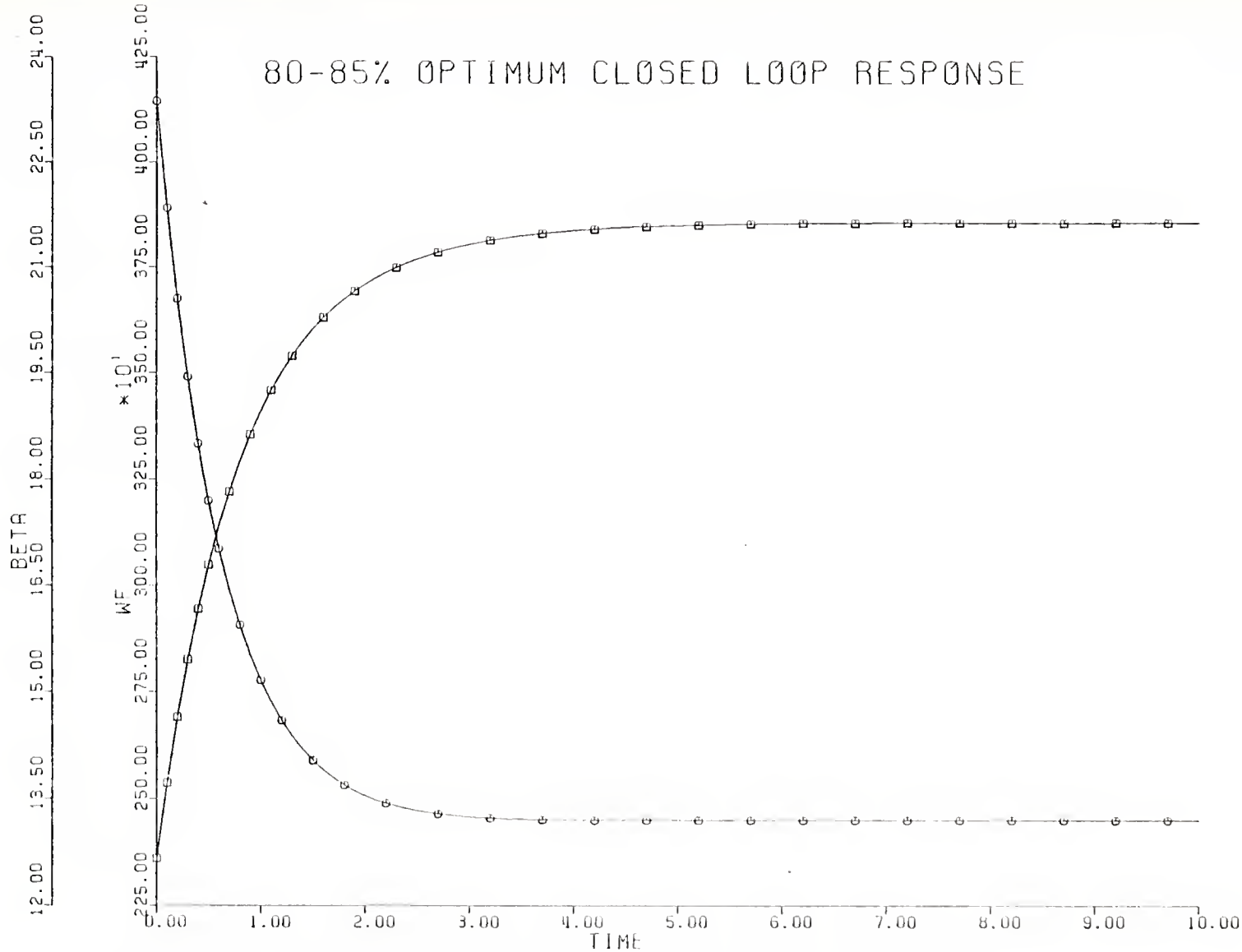

Figure 2c. Fuel Flow Rate and Stator Guide Vane Angle

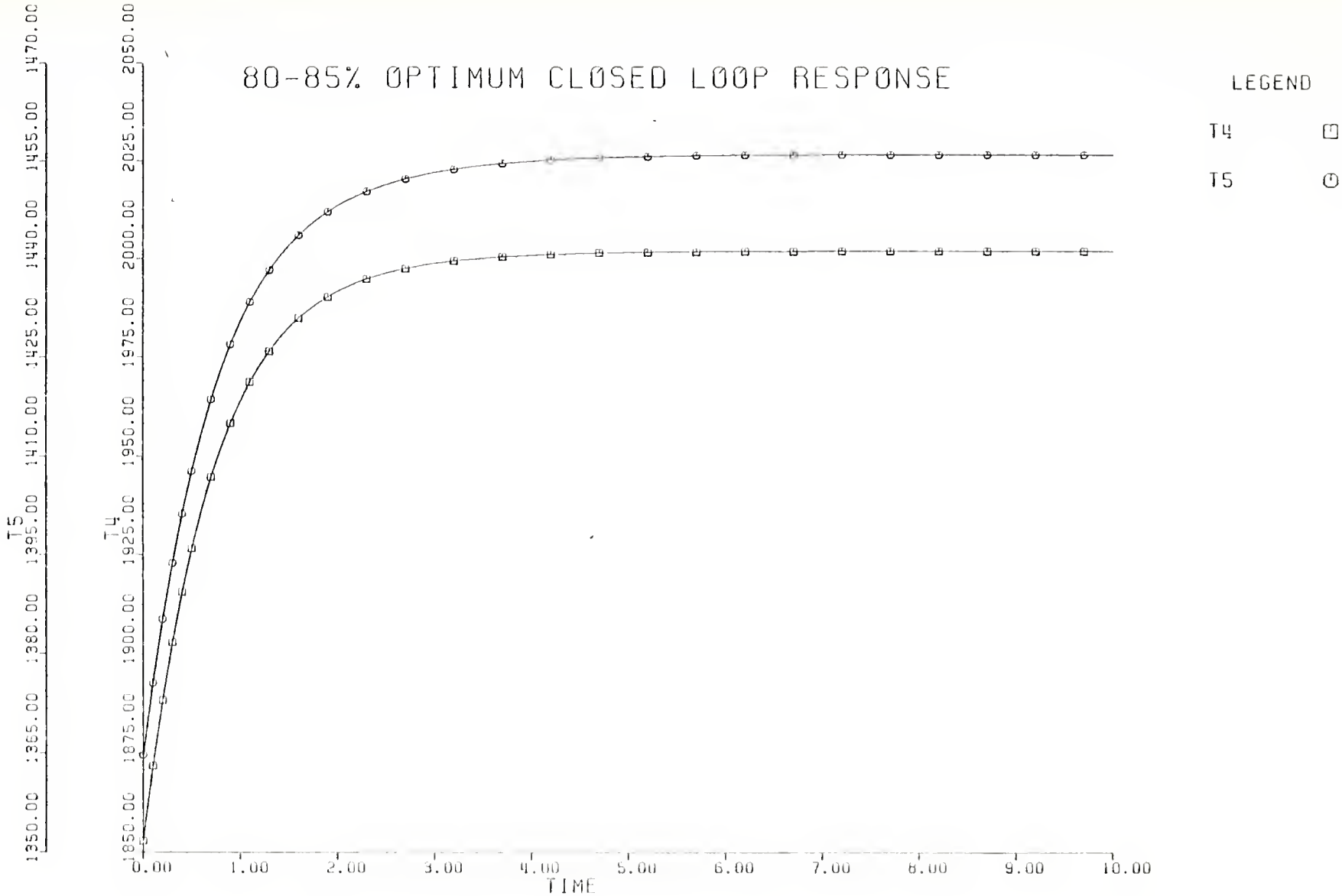

Figure 2d. Combustor Outlet Temperature and Power Turbine Inlet Temperature

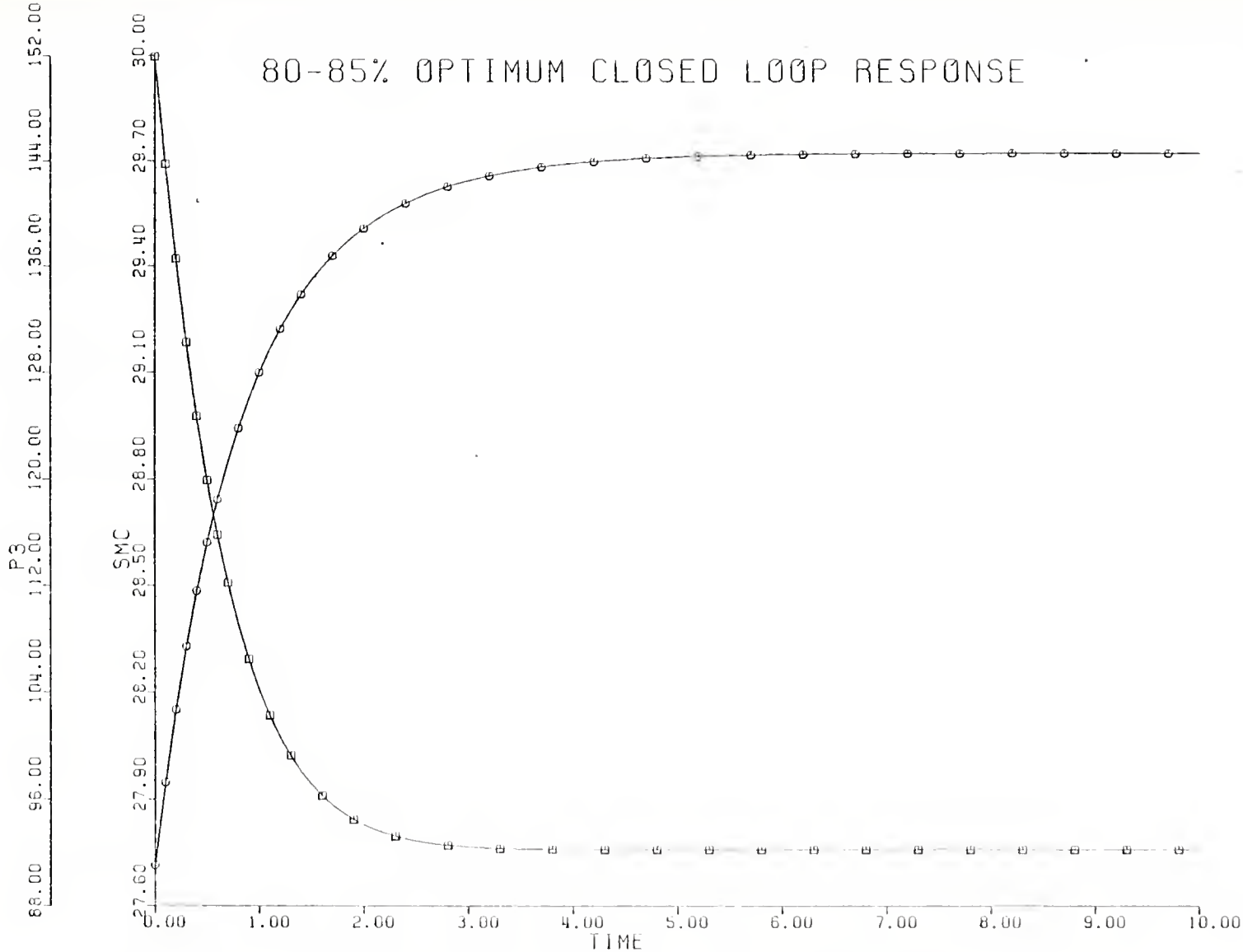

Figure 2e. Compressor Surge Margin and Total Discharge Pressure

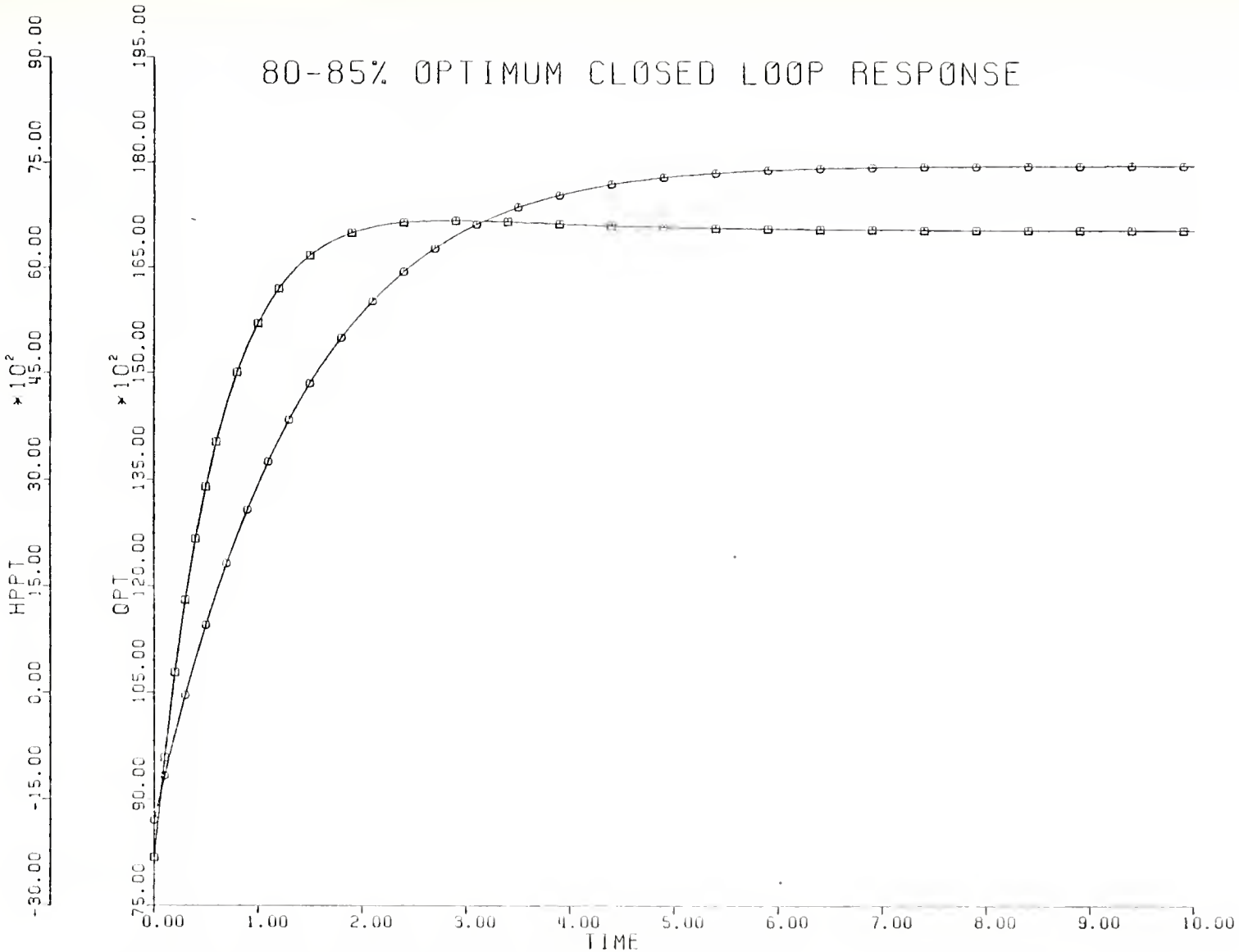

Figure 2f. Power Turbine Torque and Power

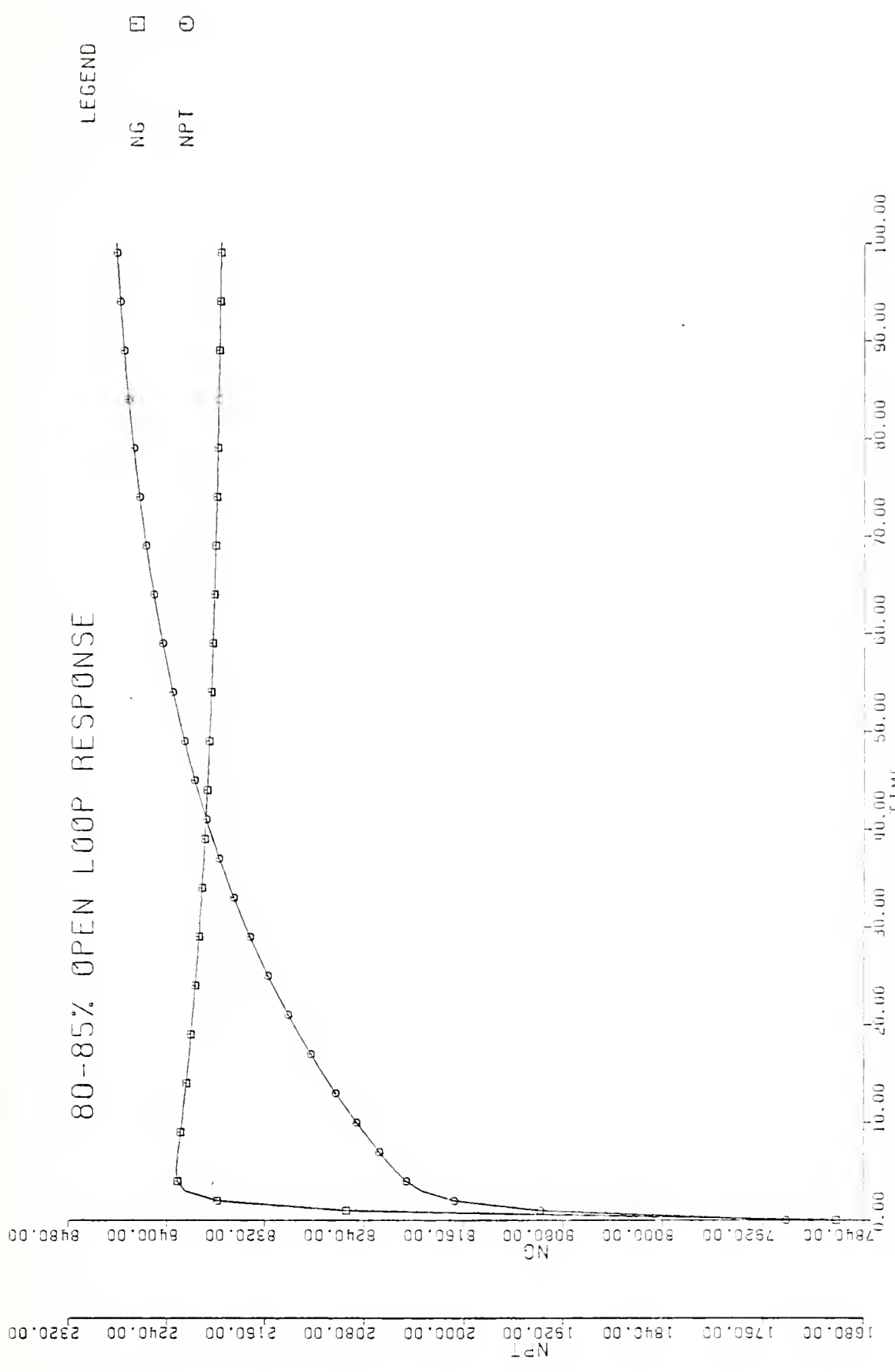

Figure 3a. Gas Generator Speed and Power Turbine Speed

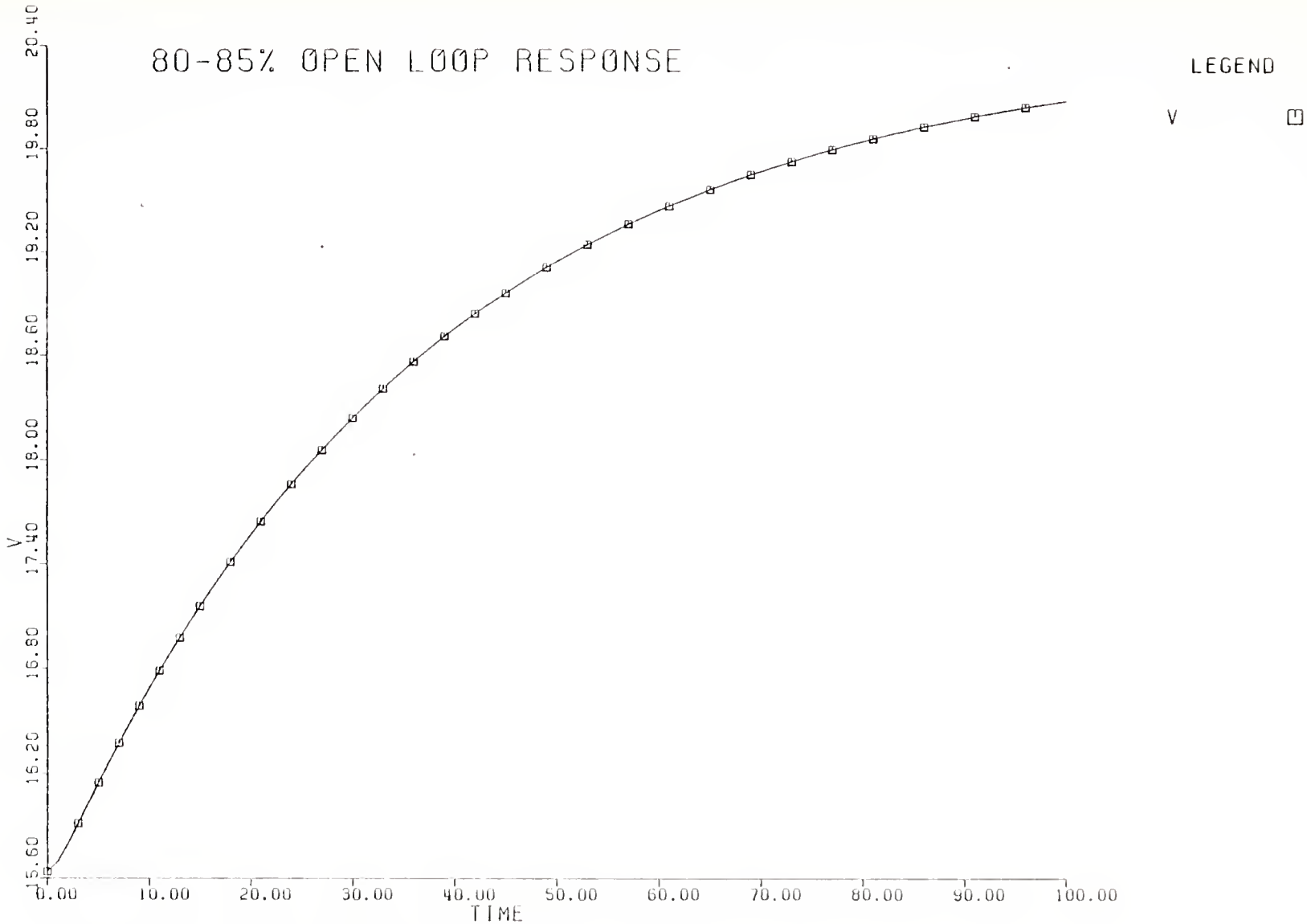

Figure 3b. Ship Speed

V. CONCLUSIONS AND RECOMMENDATIONS

A. CONCLUSIONS

1. Some form of state variable scaling is necessary to improve the efficiency of the numerical calculations. Scaling causes the A, B, C, D matrix elements to be much closer to the same order of magnitude.
2. If bleed is to be utilized as a control variable, the failure of the mathematical model to prevent it from assuming negative values must be corrected.
3. Although the system's non-linearity was in evidence at the initial condition state as shown in Table V, the mathematical model became a much more accurate representation of the actual system as the final steady state operating point was approached.
4. Optimal Controller design with the CONSYN program is by no means a completely automated (or cookbook) process. Much manual interaction with options and variable parameters must be employed in order to achieve a feasible design.
5. Input and input rate constraints were design limiting. As long as these constraints were not violated, there were no unreasonable excursions of any state or output variables.

B. RECOMMENDATIONS

1. The specific reason(s) why the optimization routine is so frequently unable to reduce violated constraints beyond a certain point must be investigated and corrected before any practical controller design by this method can be achieved.

APPENDIX A

LIST OF CONSYN SUBPROGRAMS

Name	Purpose
ANALIZ	Integral control design and analysis (previously named CYCLE in Ref. 1)
CONTL	Controllability Check
COST	Evaluation of Performance index and determination of maximum eigenvalue
DET	Matrix determinant
INVERT	Matrix inverse
LIAP	Solution to bilinear symmetric Lyapunov equations
MULT	Matrix multiplication
MULTV	Vector multiplication
MULTZ	Complex matrix multiplication
OBSERV	Observability check
OPGAIN	Solution to optimal linear regulator
PEAK	System simulation
PHIOFT	State transition matrix
POLY	Coefficients of characteristic polynomial
PRINTM	Matrix print, double precision
PRINTN	Matrix print, single precision
RANK	Matrix rank
ROOT	Polynomial roots

APPENDIX B

PROPULSION PLANT DATA

1. State Variable Representation at 70%, 75%, 80%, and 85% of Maximum Gas Generator Speed

	70%	75%	80%	85%
States				
NG (rpm)	6879.	7370.	7862.	8353.
NPT (rpm)	1058.	1313.	1742.	2300.
V (knots)	9.688	11.91	15.64	20.40
Inputs				
WF (lbm/hr)	1319.	1640.	2361.	3857.
β (deg)	33.29	30.58	23.37	13.20
WB (lbm/S)	.02	.02	.02	.02
P/D (•••)	1.43	1.43	1.43	1.43
Outputs				
SMC (%)	32.63	33.21	32.39	27.76
T4 (^{O}R)	1613.	1663.	1776.	2002.
QPT (ft-lbf)	3745.	5627.	9706.	17040.
P3 (PSIA)	54.02	69.24	98.53	144.6
HPPT (hp)	754.4	1407.	3219.	7461.
T5 (^{O}R)	1284.	1277.	1316.	1456.

2. A, B, C, D MATRIX ELEMENTS FOR 75% OF MAXIMUM GAS GENERATOR SPEED

The A Matrix

-.2709	-.1186	0.0
.1295	-.9364	57.71
0.0	.0002429	-.02793

The B Matrix

.7287	37.74	-28.29	0.0
.08656	-8.978	-7.861	-526.6
0.0	0.0	0.0	.1114

The C Matrix

.01078	-.0003271	0.0
-.2160	.0008184	0.0
3.171	-2.473	0.0
.02112	.0001619	0.0
.7928	.4526	0.0
-.2289	.01866	0.0

The D Matrix

-.01811	-.5678	2.453	0.0
.4905	9.434	10.21	0.0
2.120	-219.9	-192.5	0.0
.008820	-1.405	-1.195	0.0
.5300	-54.97	-48.13	0.0
.3635	11.49	11.85	0.0

3. A, B, C, D MATRIX ELEMENTS FOR 85% OF MAXIMUM GAS GENERATOR SPEED

The A Matrix

-1.212	-.1923	0.0
.3466	-1.711	100.3
0.0	.0004290	-.05181

The B Matrix

.6284	68.15	-26.72	0.0
.1194	-14.23	-10.79	-1634.
0.0	0.0	0.0	.3445

The C Matrix

.01097	0.0	0.0
-.2715	0.0	0.0
8.489	-5.786	0.0
.04678	0.0	0.0
3.717	7.101	0.0
-.2484	.01736	0.0

The D Matrix

-.007521	-.3569	1.229	0.0
.2423	7.875	7.273	0.0
2.925	-348.4	-264.3	0.0
.008168	-1.802	-1.349	0.0
1.281	-152.6	-115.8	0.0
.1855	7.277	6.693	0.0

4. SCALED A, B, C, D MATRIX ELEMENTS FOR 85% MAXIMUM GAS GENERATOR SPEED, CONSTANT BLEED

The Scaled A Matrix

-1.212	-.2185	0.0
.305	-1.711	.8556
0.0	.05029	-.05181

The Scaled B Matrix

1.915	1.412	0.0
.3201	-.2594	-2.928
0.0	0.0	.07237

The Scaled C Matrix

1.163	0.0	0.0
-.5899	0.0	0.0
.5683	-.4402	0.0
.4986	0.0	0.0
.4302	.9341	0.0
-.8712	.06919	0.0

The Scaled D Matrix

-2.43	-.7839	0.0
1.604	.3544	0.0
.5966	-.4831	0.0
.2652	-.3978	0.0
.4518	-.3659	0.0
1.982	.5286	0.0

5. PHYSICAL CONSTRAINTS

	Note
Inputs	
$900 < WF < 7600$ lbm/hr	(1)
$0 < \beta < 40^{\circ}$	(1)
$.01 < P/D < 1.43$	(2)
Input Rates	
$-3200 < \dot{WF} < 3200$ lbm/hr/S	(3)
$-59 < \dot{\beta} < 59\ ^{\circ}/S$	(3)
$-.12 < \dot{P}/D < .12$ 1/S	(4)

NOTES: (1) Approx. range between idle and full power condition.
(2) Model does not allow for negative pitch.
(3) Obtained from G.E.
(4) Computed from data provided by Bird Johnson Company as follows:

Propeller Diameter = 16.5 ft
Maximum Ahead Pitch = 23.5 ft
Maximum Reverse Pitch = 14.7 ft
Minimum Time for Pitch Change from Full Reverse to Full Ahead = 20 sec

$$\dot{P}/D = \frac{\Delta\ P/D}{\Delta t} = \frac{\frac{23.5}{16.5} - (-\frac{14.7}{16.5})}{20\ S} = .12\ 1/S$$

APPENDIX C

DERIVATION OF EQUATIONS USED FOR SYSTEM SIMULATION WITH CSMP

The following matrix equations may be obtained from inspection of the system block diagram in Fig. 1d:

$$\dot{X} = AX + BU$$

$$Y = CX + DU$$

$$U = \int[H(Z-EY)]dt - LX$$

or, upon differentiating,

$$\dot{U} = H(Z-EY) - L\dot{X}$$

However, the demand vector Z is equal to zero since all desired output deviations are zero at the final steady state operating point which has been defined as the origin. Thus,

$$\dot{U} = -(HEY + L\dot{X})$$

Recalling that the matrix E was defined as

$$E = [I \mid O],$$

the above matrix equations can, therefore, be expanded into the following form for the 3-state, 3-input, and 8-output system considered:

$$\dot{x}_1 = a_{11} x_1 + a_{12} x_2 + a_{13} x_3 + b_{11} u_1 + b_{12} u_2 + b_{13} u_3$$

$$\vdots$$

$$\dot{x}_3 = a_{31} x_1 + a_{32} x_2 + a_{33} x_3 + b_{31} u_1 + b_{32} u_2 + b_{33} u_3$$

$$y_1 = c_{11} x_1 + c_{12} x_2 + c_{13} x_3 + d_{11} u_1 + d_{12} u_2 + d_{13} u_3$$

$$\vdots$$

$$y_8 = c_{81} x_1 + c_{82} x_2 + c_{83} x_3 + d_{81} u_1 + d_{82} u_2 + d_{83} u_3$$

APPENDIX C (Cont'd)

$$\dot{u}_1 = -(h_{11}\, y_1 + h_{12}\, y_2 + h_{13}\, y_3 + l_{11}\, \dot{x}_1 + l_{12}\, \dot{x}_2 + l_{13}\, \dot{x}_3)$$

$$\dot{u}_3 = -(h_{31}\, y_1 + h_{32}\, y_2 + h_{33}\, y_3 + l_{31}\, \dot{x}_1 + l_{32}\, \dot{x}_2 + l_{33}\, \dot{x}_3)$$

APPENDIX D

RATIONALE FOR DESIGN FORM SELECTION

In Ref. 5, the following outputs were selected for feedback in the case of the F401 turbofan jet engine controller design:

1. Fan inlet guide vane angle (FIGV)
2. Rear compressor variable vane angle (RCVV)
3. Thrust
4. High turbine inlet temperature (HTIT)

Those outputs selected for feedback in design form number 2 of this study were:

1. Propeller pitch to diameter ratio (P/D)
2. Compressor stator guide vane angle (β)
3. Power turbine torque (QPT)
4. Power turbine inlet temperature (T5)

A comparison of these designs follows:

1. The marine propulsion gas turbine engine, of course, has no turbofan. However, the P/D was considered analogous to the FIGV since both directly relate to the loading of the output turbine. In the aircraft case, the output turbine drives the fan; in the marine case, the output turbine drives the propeller.
2. β is completely analogous to RCVV since this is the compressor vane control in both cases.

3. The thrust in the aircraft case is a measure of the total power produced. In the marine case, either ship speed, power turbine power, or power turbine torque is analogous. Torque was selected since it was considered the easiest of the three to measure accurately.
4. HTIT is equivalent to combustor outlet temperature. However, the high temperature involved shortens transducer lifetime, and is variable around the perimeter of the combustor. To eliminate these difficulties, power turbine inlet temperature, instead, was chosen for feedback.

APPENDIX E

DERIVATION OF SCALED STATE VARIABLE DATA WITH CONSTANT BLEED

From the matrix equation,

$$\dot{X} = AX + BU$$

consider one of the scalar equations

$$\dot{x}_1 = a_{11} x_1 + a_{12} x_2 + a_{13} x_3 + b_{11} u_1 + b_{12} u_2 + b_{13} u_3 + b_{14} u_4$$

Since the x's and u's are deviations from the steady state operating point, and bleed is constant, then $u_3 = 0$.

Now define the following scaled variables:

$$\hat{x}_i = \frac{x_i}{\Delta x_i}, \quad \hat{u}_i = \frac{u_i}{\Delta u_i}, \quad \hat{u}_4 = u_4$$

where the Δ's refer to the difference between initial and final conditions, and u_4 will not be scaled since its initial and final values are equal.

Then

$$\Delta x_1 \dot{\hat{x}}_1 = a_{11} \Delta x_1 \hat{x}_1 + a_{12} \Delta x_2 \hat{x}_2 + a_{13} \Delta x_3 \hat{x}_3 + b_{11} \Delta u_1 \hat{u}_1 + b_{12} \Delta u_2 \hat{u}_2 + b_{14} \hat{u}_4$$

Dividing through by Δx_1 results in

$$\dot{\hat{x}}_1 = a_{11} \hat{x}_1 + a_{12} \frac{\Delta x_2}{\Delta x_1} \hat{x}_2 + a_{13} \frac{\Delta x_3}{\Delta x_1} \hat{x}_3 + b_{11} \frac{\Delta u_1}{\Delta x_1} \hat{u}_1 + b_{12} \frac{\Delta u_2}{\Delta x_1} \hat{u}_2 + \frac{b_{14}}{\Delta x_1} \hat{u}_4$$

Carrying this procedure out with the other state and output equations results in the scaled matrix equations:

$$\dot{\hat{X}} = \hat{A}\hat{X} + \hat{B}\hat{U}$$

$$\hat{Y} = \hat{C}\hat{X} + \hat{D}\hat{U}$$

where

$$\hat{A} = \begin{bmatrix} a_{11} & a_{12}\frac{\Delta x_2}{\Delta x_1} & a_{13}\frac{\Delta x_3}{\Delta x_1} \\ a_{21}\frac{\Delta x_1}{\Delta x_2} & a_{22} & a_{23}\frac{\Delta x_3}{\Delta x_2} \\ a_{31}\frac{\Delta x_1}{\Delta x_3} & a_{32}\frac{\Delta x_2}{\Delta x_3} & a_{33} \end{bmatrix}$$

$$\hat{B} = \begin{bmatrix} b_{11}\frac{\Delta u_1}{\Delta x_1} & b_{12}\frac{\Delta u_2}{\Delta x_1} & b_{14}\frac{1}{\Delta x_1} \\ b_{21}\frac{\Delta u_1}{\Delta x_2} & b_{22}\frac{\Delta u_2}{\Delta x_2} & b_{24}\frac{1}{\Delta x_2} \\ b_{31}\frac{\Delta u_1}{\Delta x_3} & b_{32}\frac{\Delta u_2}{\Delta x_3} & b_{34}\frac{1}{\Delta x_3} \end{bmatrix}$$

$$\hat{C} = \begin{bmatrix} c_{11}\frac{\Delta x_1}{\Delta y_1} & c_{12}\frac{\Delta x_2}{\Delta y_1} & c_{13}\frac{\Delta x_3}{\Delta y_1} \\ c_{21}\frac{\Delta x_1}{\Delta y_2} & c_{22}\frac{\Delta x_2}{\Delta y_2} & c_{23}\frac{\Delta x_3}{\Delta y_2} \\ \vdots & & \\ c_{61}\frac{\Delta x_1}{\Delta y_6} & c_{62}\frac{\Delta x_2}{\Delta y_6} & c_{63}\frac{\Delta x_3}{\Delta y_6} \end{bmatrix}$$

$$\hat{D} = \begin{bmatrix} d_{11}\frac{\Delta u_1}{\Delta y_1} & d_{12}\frac{\Delta u_2}{\Delta y_1} & d_{14}\frac{1}{\Delta y_1} \\ d_{21}\frac{\Delta u_1}{\Delta y_2} & d_{22}\frac{\Delta u_2}{\Delta y_2} & d_{24}\frac{1}{\Delta y_2} \\ \vdots & & \\ d_{61}\frac{\Delta u_1}{\Delta y_6} & d_{62}\frac{\Delta u_2}{\Delta y_6} & d_{64}\frac{1}{\Delta y_6} \end{bmatrix}$$

APPENDIX F

COMPUTER OUTPUT OF OPTIMIZATION RUN FOR DESIGN 6-2F

```
CCCCCCC   OOOOOOO   PPPPPPP   EEEEEEE   SSSSSSS
C        O       O  P     P  E         S
C        O       O  P     P  E         S
C        O       O  PPPPPPP  EEEE      SSSSSSS
C        O       O  P        E               S
C        O       O  P        E               S
CCCCCCC   OOOOOOO   P        EEEEEEE   SSSSSSS

          C O N T R O L   P R O G R A M
                      F O R
          E N G I N E E R I N G   S Y N T H E S I S

                      T I T L E
FFG-7  80-85% POWER TRANSIENT, CONSTRAINED OPTIMUM INTEGRAL CONTROL DESIGN 46-2F
```

CARD IMAGES OF CONTROL DATA

```
CARD                    IMAGE

   1)  FFG-7  80-85% POWER TRANSIENT, CONSTRAINED OPTIMUM INTEGRAL CONTROL DESIGN #6-2F
   2)            2          10
   3)            5                     11
   4)
   5)
   5)
   6)                      671       -1.0
   7)  0.0         100.
   8)  0.0         100.
   9)  0.0         100.
  10)  0.0         100.
  11)  0.0         100.
  12)  0.0         100.
  13)  0.0         100.
  14)  0.0         100.
  15)  0.01        100.
  16)  0.01        100.
  17)             1           1
  18)             2          12
  19)             3          23
  20)             4          34
  21)             5          45
  22)             6          56
  23)             7          67
  24)             8          78
  25)             9         112
  26)            10         123
  27)             9
  28)           411
  29)  -1.977                        2.502
  30)           461
  31)  -1.977                        2.502
  32)           412
  33)  -1.298                        2.635
  34)           462
  35)  -1.298                        2.635
  36)           413
  37)  -1.42                         0.0
  38)           463
  39)  -1.42                         0.0
  40)           421
  41)  -2.139                        2.139
  42)           422
  43)  -5.801                        5.801
  44)           423
  45)  -.12                          .12
  46)  END
```

TITLE:
FFG-7 80-85% POWER TRANSIENT, CONSTRAINED OPTIMUM INTEGRAL CONTROL DESIGN #6-2F

CONTROL PARAMETERS:

CALCULATION CONTROL,	NCALC =	2
NUMBER OF GLOBAL DESIGN VARIABLES,	NDV =	10
NUMBER OF SENSITIVITY VARIABLES,	NSV =	0
NUMBER OF FUNCTIONS IN TWO-SPACE,	N2VAR =	0
INPUT INFORMATION PRINT CODE,	IPNPUT =	0
SENSITIVITY PRINT CODE,	IPSENS =	0
TWO-SPACE PRINT CODE,	IP2VAR =	0
DEBUG PRINT CODE,	IPDBG =	0

CALCULATION CONTROL, NCALC

VALUE	MEANING
1	SINGLE ANALYSIS
2	OPTIMIZATION
3	SENSITIVITY
4	TWO-VARIABLE FUNCTION SPACE
5	OPTIMUM SENSITIVITY

GLOBAL VARIABLE NUMBER OF OBJECTIVE = 671
MULTIPLIER (NEGATIVE INDICATES MINIMIZATION) = -0.1000E 01

CONMIN PARAMETERS (IF ZERO, CONMIN DEFAULT WILL OVER-RIDE)

IPRINT	ITMAX	ICNDIR	NSCAL	ITRM	LINOBJ	NACMXL	NFDG
5	0	0	11	0	0	12	0

FDCH	FDCHM	CT	CTMIN
0.0	0.0	0.0	0.0
CTL	CTLMIN	THETA	PHI
0.0	0.0	0.0	0.0
DELFUN	DABFUN	ALPHAX	ABOBJ1
0.0	0.0	0.0	0.0

DESIGN VARIABLE INFORMATION
NON-ZERO INITIAL VALUE WILL OVER-RIDE MODULE INPUT

D. V. NO.	LOWER BOUND	UPPER BOUND	INITIAL VALUE	SCALE
1	0.0	0.10000E 03	0.0	0.0
2	0.0	0.10000E 03	0.0	0.0
3	0.0	0.10000E 03	0.0	0.0
4	0.0	0.10000E 03	0.0	0.0
5	0.0	0.10000E 03	0.0	0.0
6	0.0	0.10000E 03	0.0	0.0
7	0.0	0.10000E 03	0.0	0.0
8	0.0	0.10000E 03	0.0	0.0
9	0.10000E-01	0.10000E 03	0.0	0.0
10	0.10000E-01	0.10000E 03	0.0	0.0

DESIGN VARIABLES

ID	D. V. NO.	GLOBAL VAR. NO.	MULTIPLYING FACTOR
1	1	1	0.10000E 01
2	2	12	0.10000E 01
3	3	23	0.10000E 01
4	4	34	0.10000E 01
5	5	45	0.10000E 01
6	6	56	0.10000E 01
7	7	67	0.10000E 01
8	8	78	0.10000E 01
9	9	112	0.10000E 01
10	10	123	0.10000E 01

CONSTRAINT INFORMATION

THERE ARE 9 CONSTRAINT SETS

ID	GLOBAL VAR. 1	GLOBAL VAR. 2	LINEAR ID	LOWER BOUND	NORMALIZATION FACTOR	UPPER BOUND	NORMALIZATION FACTOR
1	411	0	0	-0.19770E 01	0.19770E 01	0.25020E 01	0.25020E 01
3	461	0	0	-0.19770E 01	0.19770E 01	0.25020E 01	0.25020E 01
5	412	0	0	-0.12980E 01	0.12980E 01	0.26350E 01	0.26350E 01
7	462	0	0	-0.12980E 01	0.12980E 01	0.26350E 01	0.26350E 01
9	413	0	0	-0.14200E 01	0.14200E 01	0.0	0.10000E 00
11	463	0	0	-0.14200E 01	0.14200E 01	0.0	0.10000E 00
13	421	0	0	-0.21390E 01	0.21390E 01	0.21390E 01	0.21390E 01
15	422	0	0	-0.58010E 01	0.58010E 01	0.58010E 01	0.58010E 01
17	423	0	0	-0.12000E 00	0.12000E 00	0.12000E 00	0.12000E 00

TOTAL NUMBER OF CONSTRAINED PARAMETERS = 9

DATA STORAGE REQUIREMENTS

REAL			INTEGER		
INPUT	EXECUTION	AVAILABLE	INPUT	EXECUTION	AVAILABLE
95	533	5000	68	104	1000

LINEAR INTEGRAL OPTIMAL CONTROL DESIGN PROGRAM
PROBLEM IDENTIFICATION- FFG7 80-854

JCALC= 1

****

THE A MATRIX

	1	2	3
1	-1.21200000 00	-2.18500000-01	0.0
2	3.05000000-01	-1.71100000 00	8.55600000-01
3	0.0	5.02500000-02	-5.18100000-02

THE B MATRIX

	1	2	3
1	1.91500000 00	1.41200000 00	0.0
2	3.20100000-01	-2.59400000-01	-2.92800000 00
3	0.0	0.0	7.23700000-02

THE C MATRIX

	1	2	3
1	0.0	0.0	0.0
2	5.68300000-01	-4.40200000-01	0.0
3	-8.71200000-01	6.91500000-02	0.0
4	0.0	0.0	1.00000000 00
5	1.16300000 00	0.0	0.0
6	-5.89900000-01	0.0	0.0
7	4.98600000-01	0.0	0.0
8	4.30200000-01	9.34100000-01	0.0

THE D MATRIX

	1	2	3
1	0.0	1.00000000 00	0.0
2	5.96600000-01	-4.83100000-01	0.0
3	1.98200000 00	5.28600000-01	0.0
4	0.0	0.0	0.0
5	-2.43000000 00	-7.83900000-01	0.0
6	1.66400000 00	3.54400000-01	0.0
7	2.65200000-01	-3.97600000-01	0.0
8	4.51800000-01	-3.65900000-01	0.0

THE Q MATRIX

	1	2	3	4	5	6	7	8
1	1.0000000E 00	0.0	0.0	0.0	0.0	0.0	0.0	0.0
2	0.0	1.0000000E 00	0.0	0.0	0.0	0.0	0.0	0.0
3	0.0	0.0	1.0000000E 00	0.0	0.0	0.0	0.0	0.0
4	0.0	0.0	0.0	1.0000000E 00	0.0	0.0	0.0	0.0
5	0.0	0.0	0.0	0.0	1.0000000E 00	0.0	0.0	0.0
6	0.0	0.0	0.0	0.0	0.0	1.0000000E 00	0.0	0.0
7	0.0	0.0	0.0	0.0	0.0	0.0	1.0000000E 00	0.0
8	0.0	0.0	0.0	0.0	0.0	0.0	0.0	1.0000000E 00

THE RR MATRIX

	1	2	3
1	1.0000000E 00	0.0	0.0
2	0.0	1.0000000E 00	0.0
3	0.0	0.0	1.0000000E 00

****

ORIGINAL SYSTEM CHARACTERISTICS

THE CHARACTERISTIC POLYNOMIAL - IN ASCENDING POWERS OF S

5.87427170-02 2.24878700 00 2.97481000 00 1.00000000 00

****

THE EIGENVALUES OF THE STATE MATRIX

REAL PART	IMAGINARY PART
-2.70834510-02	0.0
-1.41623900 00	0.0
-1.53148750 00	0.0

****

PEAK CALLED; NORM OF A= 0.63790 01, SERIES FOR PHI CONTAINED 8 TERMS
PEAK CALLED; NORM OF A= 0.63790 01, SERIES FOR PHI CONTAINED 8 TERMS

****

THE G1 GAIN MATRIX

	1	2	3
1	-5.50626080-01	9.88228700-02	1.57592630-01
2	-1.18718030-01	-5.54694130-02	2.58457120-02
3	-3.65858220-02	-2.84531860-01	-4.20870190-01

THE G2 GAIN MATRIX

	1	2	3
1	3.28853200 00	4.06828620-01	-1.04124360-01
2	4.06828620-01	1.43730390 00	8.48274290-02
3	-1.04124360-01	8.48274290-02	1.25986680 00

****

THE H MATRIX

	1	2	3
1	9.61629490-01	5.77020220-01	2.65880300 00
2	1.30488660 00	1.60840910-01	5.75368380-02
3	-1.18511900 00	1.00346140 00	-2.23069300 00

****

THE L MATRIX

	1	2	3
1	-1.20315240 00	-6.69447700-02	-4.14727990 00
2	1.14449800-01	-6.97858060-02	-1.65131150 00
3	2.00656620 00	-3.87785220-01	1.71938150 00

****

****

FINAL SYSTEM CHARACTERISTICS

THE CHARACTERISTIC POLYNOMIAL - IN ASCENDING POWERS OF S

3.79267530-01 1.3002435D 01 4.07131000 01 5.01047330 01 3.0178705D 01 8.96051260 00
1.00000000 00

****

THE EIGENVALUES OF THE STATE MATRIX

REAL PART	IMAGINARY PART
-3.23103120-02	0.0
-1.53239440 00	-5.17157650-01
-1.53239440 00	9.17157650-01
-7.55402770-01	0.0
-1.26915080 00	0.0
-3.83886000 00	0.0

****

****

REQUESTED SETTLING TIME IS 60.000 SECONDS

****

SIMULATION RUN TIME = 72.000

THE INITIAL CONDITION VECTOR

X(1)	-1.000
X(2)	-1.000
X(3)	-1.000
U(1)	-1.000
U(2)	1.000
U(3)	0.0

STEADY STATE VALUES OF THE OUTPUTS AT 60.000 SECONDS

Y(1)	0.005
Y(2)	0.006
Y(3)	0.004
Y(4)	-0.151
Y(5)	-0.003
Y(6)	0.004
Y(7)	0.008
Y(8)	0.019

	PEAK VALUES	TIME OF OCCURRANCE
X(1)	0.110	3.10
X(2)	0.095	2.70
X(3)	-0.102	71.95
Y(1)	1.000	*******
Y(2)	0.039	5.15
Y(3)	0.087	0.70
Y(4)	-0.102	71.95
Y(5)	0.483	*******
Y(6)	0.043	0.00
Y(7)	0.050	4.15
Y(8)	0.135	3.00
UDOT(1)	2.587	
UDOT(2)	-1.179	
UDOT(3)	-0.931	
U(1)	0.045	
U(2)	1.000	
U(3)	0.0	
MINIMUM INPUT VALUES		
U(1)	-1.000	
U(2)	0.004	
U(3)	-0.396	
MINIMUM STATE VALUES		
X(1)	-1.000	
X(2)	-1.000	
X(3)	-1.003	
MINIMUM OUTPUT VALUES		
Y(1)	0.004	
Y(2)	-1.209	
Y(3)	-0.651	
Y(4)	-1.003	
Y(5)	-0.253	
Y(6)	-0.660	
Y(7)	-1.162	
Y(8)	-2.182	

****

```
*********************************
*                               *
*           C O N M I N         *
*                               *
*      FORTRAN PROGRAM FOR      *
*                               *
*  CONSTRAINED FUNCTION MINIMIZATION  *
*                               *
*********************************
```

CONSTRAINED FUNCTION MINIMIZATION

CONTROL PARAMETERS

IPRINT	NOV	ITMAX	NCON	NSIDE	ICNDIR	NSCAL	NFDG
5	10	20	18	1	11	11	0

LINOBJ	ITRM	N1	N2	N3	N4	N5
0	3	12	38	12	12	24

CT	CTMIN	CTL	CTLMIN
-0.10000E 00	0.40000E-02	-0.10000E-01	0.10000E-02

THETA	PHI	DELFUN	DABFUN
0.10000E 01	0.50000E 01	0.10000E-03	0.23559E-01

FDCH	FDCHM	ALPHAX	ABOBJ1
0.10000E-01	0.10000E-01	0.10000E 00	0.10000E 00

LOWER BOUNDS ON DECISION VARIABLES (VLB)

1)	0.0	0.0	0.0	0.0	0.0	0.0
7)	0.0	0.0	0.10000E-01	0.10000E-01		

UPPER BOUNDS ON DECISION VARIABLES (VUB)

1)	0.10000E 03	0.10000E 03	0.10000E 03	0.10000E 03	0.10000E 03	0.10000E 03
7)	0.10000E 03	0.10000E 03	0.10000E 03	0.10000E 03		

ALL CONSTRAINTS ARE NON-LINEAR

INITIAL FUNCTION INFORMATION

OBJ = 0.23559DE 02

DECISION VARIABLES (X-VECTOR)

1)	0.10000E 01	0.10000E 01	0.10000E 01	0.10000E 01	0.10000E 01	0.10000E 01
7)	0.10000E 01	0.10000E 01	0.10000E 01	0.10000E 01		

CONSTRAINT VALUES (G-VECTOR)

1)	-0.10230E 01	-0.98183E 00	-0.49418E 00	-0.13997E 01	-0.17764E 01	-0.62049E 00
7)	-0.10028E 01	-0.99862E 00	-0.10000E 01	0.0	-0.72147E 00	-0.39551E 01
13)	-0.22097E 01	0.20967E 00	-0.79679E 00	-0.12032E 01	0.67578E 01	-0.87578E 01

```
BEGIN ITERATION NUMBER     1

CT =  -0.10000E 00      CTL =  -0.10000E-01      PHI =   0.50000E 01

NEW SCALING VECTOR (SCAL)
 0.1000E 01   0.1000E 01   0.1000E 01   0.1000E 01   0.1000E 01   0.1000E 01
 0.1000E 01   0.1000E 01   0.1000E 01
      PEAK CALLED; NORM OF A=  0.63790 01, SERIES FOR PHI CONTAINED  8 TERMS
      PEAK CALLED; NORM OF A=  0.63790 01, SERIES FOR PHI CONTAINED  8 TERMS
      PEAK CALLED; NORM OF A=  0.63790 01, SERIES FOR PHI CONTAINED  8 TERMS
      PEAK CALLED; NORM OF A=  0.63790 01, SERIES FOR PHI CONTAINED  8 TERMS
      PEAK CALLED; NORM OF A=  0.63790 01, SERIES FOR PHI CONTAINED  8 TERMS
      PEAK CALLED; NORM OF A=  0.63790 01, SERIES FOR PHI CONTAINED  8 TERMS
      PEAK CALLED; NORM OF A=  0.63790 01, SERIES FOR PHI CONTAINED  8 TERMS
      PEAK CALLED; NORM OF A=  0.63790 01, SERIES FOR PHI CONTAINED  8 TERMS
      PEAK CALLED; NORM OF A=  0.63790 01, SERIES FOR PHI CONTAINED  8 TERMS
      PEAK CALLED; NORM OF A=  0.63790 01, SERIES FOR PHI CONTAINED  8 TERMS

THERE ARE     1 ACTIVE CONSTRAINTS
CONSTRAINT NUMBERS ARE
   10

THERE ARE     2 VIOLATED CONSTRAINTS
CONSTRAINT NUMBERS ARE
   14   17

THERE ARE     0 ACTIVE SIDE CONSTRAINTS

GRADIENT OF OBJ
  1)     0.38910E 00  0.66528E 00  0.72632E 00  0.15636E 02  0.11658E 01  0.42725E 00
  7)     0.30975E 00  0.10956E 01  0.70190E 00  0.84991E 00

GRADIENTS OF ACTIVE AND VIOLATED CONSTRAINTS
CONSTRAINT NUMBER   10
  1)     0.0          0.0          0.0          0.0          0.0          0.0
  7)     0.0          0.0          0.0          0.0

CONSTRAINT NUMBER   14
  1)     0.13816E-01  0.95987E-01  0.55194E-01  0.60636E-01  0.25141E-01  0.52071E-01
  7)     0.70930E-01  0.21186E 00 -0.20957E-01  0.96738E-02

CONSTRAINT NUMBER   17
  1)    -0.17347E 00 -0.10566E 01 -0.39005E-01  0.52137E 00 -0.42534E-01 -0.12970E-01
  7)    -0.16460E 00  0.48577E 01  0.27046E 00 -0.45976E 01


PUSH-OFF FACTORS, (THETA(I), I=1,NAC)
  1)     0.20000E-01  0.19180E 00  0.10000E 01

CONSTRAINT PARAMETER, BETA =   0.0

SEARCH DIRECTION (S-VECTOR)
  1)    -0.24885E-01 -0.42549E-01 -0.46453E-01 -0.10000E 01 -0.74558E-01 -0.27325E-01
  7)    -0.19811E-01 -0.70069E-01 -0.44891E-01 -0.54357E-01

ONE-DIMENSIONAL SEARCH
INITIAL SLOPE = -0.1597E 02  PROPOSED ALPHA =  0.1000E 01
```

```
* * CONSTRAINED ONE-DIMENSIONAL SEARCH INFORMATION * * *

   PROPOSED DESIGN
   ALPHA = 0.10000E 01
   X-VECTOR
 0.9751E 00  0.9575E 00  0.9535E 00  0.6557E-06  0.9254E 00  0.9727E 00  0.9802E 00  0.9299E 00
 0.9551E 00  0.9456E 00
         PEAK CALLED; NORM OF A=  0.63790 01, SERIES FOR PHI CONTAINED  8 TERMS

   OBJ =  0.72552E 01

   CONSTRAINT VALUES
-0.1000E 01 -0.9997E 00 -0.4942E 00 -0.1400E 01 -0.1770E 01 -0.6205E 00 -0.1000E 01 -0.1000E 01
-0.1000E 01  0.0        -0.7450E 00 -0.3621E 01 -0.2120E 01  0.1195E 00 -0.7870E 00 -0.1213E 01
 0.6133E 01 -0.8133E 01

   PROPOSED DESIGN
   ALPHA = 0.10000E 01
   X-VECTOR
 0.9502E 00  0.9149E 00  0.9071E 00  0.6557E-06  0.8509E 00  0.9453E 00  0.9604E 00  0.8599E 00
 0.9102E 00  0.8913E 00
         PEAK CALLED; NORM OF A=  0.63790 01, SERIES FOR PHI CONTAINED  8 TERMS

   OBJ =  0.69385E 01

   CONSTRAINT VALUES
-0.1000E 01 -0.9997E 00 -0.4942E 00 -0.1400E 01 -0.1770E 01 -0.6205E 00 -0.1000E 01 -0.1000E 01
-0.1000E 01  0.0        -0.7460E 00 -0.3606E 01 -0.2091E 01  0.9060E-01 -0.7861E 00 -0.1214E 01
 0.6033E 01 -0.8033E 01

   TWO-POINT INTERPOLATION

   PROPOSED DESIGN
   ALPHA = 0.50000E 01
   X-VECTOR
 0.8507E 00  0.7447E 00  0.7213E 00  0.6557E-06  0.5527E 00  0.8360E 00  0.8811E 00  0.5796E 00
 0.7307E 00  0.6739E 00
         PEAK CALLED; NORM OF A=  0.63790 01, SERIES FOR PHI CONTAINED  8 TERMS

   OBJ =  0.56344E 01

   CONSTRAINT VALUES
-0.1000E 01 -0.9999E 00 -0.4942E 00 -0.1400E 01 -0.1770E 01 -0.6205E 00 -0.1000E 01 -0.1000E 01
-0.1000E 01  0.0        -0.7532E 00 -0.3505E 01 -0.1965E 01 -0.3532E-01 -0.7811E 00 -0.1219E 01
 0.5420E 01 -0.7420E 01

   * * * END OF ONE-DIMENSIONAL SEARCH

   CALCULATED ALPHA =   0.60000E 01

   OBJ =   0.56344E 01

   DECISION VARIABLES (X-VECTOR)
     1)    0.85069E 00  0.74471E 00  0.72128E 00  0.65565E-06  0.55265E 00  0.83605E 00
     7)    0.88114E 00  0.57959E 00  0.73065E 00  0.67386E 00

   CONSTRAINT VALUES (G-VECTOR)
     1)   -0.10001E 01 -0.99990E 00 -0.49418E 00 -0.13997E 01 -0.17704E 01 -0.62049E 00
     7)   -0.10000E 01 -0.10000E 01 -0.10000E 01  0.0        -0.75320E 00 -0.35045E 01
    13)   -0.19647E 01 -0.35318E-01 -0.78110E 00 -0.12189E 01  0.54199E 01 -0.74199E 01
```

```
BEGIN ITERATION NUMBER    2

CT =  -0.10000E 00      CTL =  -0.10000E-01      PHI =   0.50000E 01
      PEAK CALLED; NORM OF A=   0.63790 01, SERIES FOR PHI CONTAINED   8 TERMS
      PEAK CALLED; NORM OF A=   0.63790 01, SERIES FOR PHI CONTAINED   8 TERMS
      PEAK CALLED; NORM OF A=   0.63790 01, SERIES FOR PHI CONTAINED   8 TERMS
      PEAK CALLED; NORM OF A=   0.63790 01, SERIES FOR PHI CONTAINED   8 TERMS
      PEAK CALLED; NORM OF A=   0.63790 01, SERIES FOR PHI CONTAINED   8 TERMS
      PEAK CALLED; NORM OF A=   0.63790 01, SERIES FOR PHI CONTAINED   8 TERMS
      PEAK CALLED; NORM OF A=   0.63790 01, SERIES FOR PHI CONTAINED   8 TERMS
      PEAK CALLED; NORM OF A=   0.63790 01, SERIES FOR PHI CONTAINED   8 TERMS
      PEAK CALLED; NORM OF A=   0.63790 01, SERIES FOR PHI CONTAINED   8 TERMS
      PEAK CALLED; NORM OF A=   0.63790 01, SERIES FOR PHI CONTAINED   8 TERMS

THERE ARE    2 ACTIVE CONSTRAINTS
CONSTRAINT NUMBERS ARE
   10   14

THERE ARE    1 VIOLATED CONSTRAINTS
CONSTRAINT NUMBERS ARE
   17

THERE ARE    1 ACTIVE SIDE CONSTRAINTS
DECISION VARIABLES AT LOWER OR UPPER BOUNDS (MINUS INDICATES LOWER BOUND)
   -4

GRADIENT OF OBJ
  1)    0.36192E 00  0.62790E 00  0.81024E 00  0.16359E 02  0.12558E 01  0.47817E 00
  7)    0.27380E 00  0.98553E 00  0.71764E 00  0.81511E 00

GRADIENTS OF ACTIVE AND VIOLATED CONSTRAINTS
CONSTRAINT NUMBER   10
  1)    0.0          0.0          0.0          0.0          0.0          0.0
  7)    0.0          0.0          0.0          0.0

CONSTRAINT NUMBER   14
  1)    0.13286E-01  0.11730E 00  0.75126E-01  0.77177E-01  0.44585E-01  0.69062E-01
  7)    0.88234E-01  0.26849E 00 -0.22961E-01  0.60637E-02

CONSTRAINT NUMBER   17
  1)   -0.18549E 00 -0.18422E 01  0.46444E-01  0.94223E 00 -0.46635E-01 -0.12398E-02
  7)   -0.29001E 00  0.84336E 01  0.33321E 00 -0.54813E 01

SIDE CONSTRAINT ON VARIABLE    4
  1)    0.0          0.0          0.0         -0.10000E 01  0.0          0.0
  7)    0.0          0.0          0.0          0.0


PUSH-OFF FACTORS, (THETA(I), I=1,NAC)
  1)    0.20000E-01  0.83676E-02  0.10000E 01  0.0

CONSTRAINT PARAMETER, BETA =  -0.19454E-03

SEARCH DIRECTION (S-VECTOR)
  1)   -0.27931E 00 -0.48458E 00 -0.62530E 00  0.0         -0.10000E 01 -0.36903E 00
  7)   -0.21130E 00 -0.76058E 00 -0.55384E 00 -0.62904E 00

ONE-DIMENSIONAL SEARCH
INITIAL SLOPE = -0.4102E 01   PROPOSED ALPHA =  0.2513E 01
```

```
* * CONSTRAINED ONE-DIMENSIONAL SEARCH INFORMATION * * *

   PROPOSED DESIGN
   ALPHA = 0.55265E 00
   X-VECTOR
 0.6963E 00  0.4769E 00  0.3757E 00  0.6557E-06  0.5960E-07  0.6321E 00  0.7644E 00  0.1593E 00
 0.4246E 00  0.3262E 00
         PEAK CALLED; NORM OF A=  0.6379D 01, SERIES FOR PHI CONTAINED  7 TERMS

   OBJ =  0.31798E 01

   CONSTRAINT VALUES
-0.1000E 01 -0.1000E 01 -0.4942E 00 -0.1400E 01 -0.1770E 01 -0.6205E 00 -0.1000E 01 -0.1000E 01
-0.1000E 01  0.0        -0.7914E 00 -0.2962E 01 -0.1701E 01 -0.2989E 00 -0.7492E 00 -0.1251E 01
 0.2493E 01 -0.4483E 01


   PROPOSED DESIGN
   ALPHA = 0.20938E 00
   X-VECTOR
 0.6378E 00  0.3754E 00  0.2448E 00  0.6557E-06  0.5960E-07  0.5548E 00  0.7201E 00  0.1192E-06
 0.3086E 00  0.1945E 00
         PEAK CALLED; NORM OF A=  0.6379D 01, SERIES FOR PHI CONTAINED  7 TERMS

   OBJ =  0.24299E 01

   CONSTRAINT VALUES
-0.1000E 01 -0.1000E 01 -0.4942E 00 -0.1400E 01 -0.1770E 01 -0.6205E 00 -0.9957E 00 -0.1000E 01
-0.1026E 01  0.3666E 00 -0.8200E 00 -0.2556E 01 -0.1566E 01 -0.4337E 00 -0.7177E 00 -0.1282E 01
-0.2900E 01  0.9002E 00

   TWO-POINT INTERPOLATION


   PROPOSED DESIGN
   ALPHA = 0.96582E-01
   X-VECTOR
 0.6694E 00  0.4301E 00  0.3153E 00  0.6557E-06  0.5960E-07  0.5965E 00  0.7440E 00  0.8579E-01
 0.3711E 00  0.2655E 00
         PEAK CALLED; NORM OF A=  0.6379D 01, SERIES FOR PHI CONTAINED  7 TERMS

   OBJ =  0.28548E 01

   CONSTRAINT VALUES
-0.1000E 01 -0.1000E 01 -0.4942E 00 -0.1400E 01 -0.1770E 01 -0.6205E 00 -0.1000E 01 -0.1000E 01
-0.1000E 01  0.0        -0.8059E 00 -0.2757E 01 -0.1647E 01 -0.3531E 00 -0.7350E 00 -0.1261E 01
 0.8568E 00 -0.2897E 01

   THREE-POINT INTERPOLATION


   PROPOSED DESIGN
   ALPHA = 0.96582E-01
   X-VECTOR
 0.6694E 00  0.4301E 00  0.3153E 00  0.6557E-06  0.5960E-07  0.5965E 00  0.7440E 00  0.8579E-01
 0.3711E 00  0.2655E 00
         PEAK CALLED; NORM OF A=  0.6379D 01, SERIES FOR PHI CONTAINED  7 TERMS

   OBJ =  0.28548E 01

   CONSTRAINT VALUES
-0.1000E 01 -0.1000E 01 -0.4942E 00 -0.1400E 01 -0.1770E 01 -0.6205E 00 -0.1000E 01 -0.1000E 01
-0.1000E 01  0.0        -0.8059E 00 -0.2757E 01 -0.1647E 01 -0.3531E 00 -0.7390E 00 -0.1261E 01
 0.8968E 00 -0.2897E 01

   * * * END OF ONE-DIMENSIONAL SEARCH

   CALCULATED ALPHA =  0.64923E 00

   OBJ =  0.285476E 01

   DECISION VARIABLES (X-VECTOR)
     1)   0.66935E 00  0.43010E 00  0.31532E 00  0.65565E-06  0.59605E-07  0.59646E 00
     7)   0.74395E 00  0.85792E-01  0.37108E 00  0.26545E 00

   CONSTRAINT VALUES (G-VECTOR)
     1)  -0.10000E 01 -0.10000E 01 -0.49418E 00 -0.13997E 01 -0.17704E 01 -0.62045E 00
     7)  -0.99996E 00 -0.10000E 01 -0.10000E 01  0.0         -0.80587E 00 -0.27566E 01
    13)  -0.16469E 01 -0.35309E 00 -0.73897E 00 -0.12610E 01  0.89683E 00 -0.28968E 01
```

```
BEGIN ITERATION NUMBER     3

CT =  -0.10000E 00      CTL =  -0.10000E-01      PHI =   0.50000E 02
      PEAK CALLED; NORM OF A=  0.63790 01, SERIES FOR PHI CONTAINED  7 TERMS
      PEAK CALLED; NORM OF A=  0.63790 01, SERIES FOR PHI CONTAINED  7 TERMS
      PEAK CALLED; NORM OF A=  0.63790 01, SERIES FOR PHI CONTAINED  7 TERMS
      PEAK CALLED; NORM OF A=  0.63790 01, SERIES FOR PHI CONTAINED  7 TERMS
      PEAK CALLED; NORM OF A=  0.63790 01, SERIES FOR PHI CONTAINED  7 TERMS
      PEAK CALLED; NORM OF A=  0.63790 01, SERIES FOR PHI CONTAINED  7 TERMS
      PEAK CALLED; NORM OF A=  0.63790 01, SERIES FOR PHI CONTAINED  7 TERMS
      PEAK CALLED; NORM OF A=  0.63790 01, SERIES FOR PHI CONTAINED  7 TERMS
      PEAK CALLED; NORM OF A=  0.63790 01, SERIES FOR PHI CONTAINED  7 TERMS
      PEAK CALLED; NORM OF A=  0.63790 01, SERIES FOR PHI CONTAINED  7 TERMS

THERE ARE    1 ACTIVE CONSTRAINTS
CONSTRAINT NUMBERS ARE
   10

THERE ARE    1 VIOLATED CONSTRAINTS
CONSTRAINT NUMBERS ARE
   17

THERE ARE    2 ACTIVE SIDE CONSTRAINTS
DECISION VARIABLES AT LOWER OR UPPER BOUNDS (MINUS INDICATES LOWER BOUND)
   -4   -5

GRADIENT OF OBJ
  1)    0.32701E 00  0.62103E 00  0.11005E 01  0.16372E 02  0.17044E 01  0.67778E 00
  7)    0.31261E 00  0.15320E 01  0.77075E 00  0.73729E 00

GRADIENTS OF ACTIVE AND VIOLATED CONSTRAINTS
CONSTRAINT NUMBER   10
  1)    0.0          0.0          0.0          0.0          0.0          0.0
  7)    0.0          0.0          0.0          0.0

CONSTRAINT NUMBER   17
  1)   -0.23117E 00 -0.34364E 01  0.80034E 00  0.34773E 01  0.21535E 00  0.37317E 00
  7)   -0.31590E 00  0.28662E 02  0.52978E 00 -0.19370E 01

SIDE CONSTRAINT ON VARIABLE    4
  1)    0.0          0.0          0.0         -0.10000E 01  0.0          0.0
  7)    0.0          0.0          0.0          0.0

SIDE CONSTRAINT ON VARIABLE    5
  1)    0.0          0.0          0.0          0.0         -0.10000E 01  0.0
  7)    0.0          0.0          0.0          0.0


PUSH-OFF FACTORS, (THETA(I), I=1,NAC)
  1)    0.20000E-01  0.10000E 01  0.0          0.0

CONSTRAINT PARAMETER, EETA =   0.0

SEARCH DIRECTION (S-VECTOR)
  1)   -0.21546E 00 -0.40538E 00 -0.71838E 00  0.0          0.0         -0.44242E 00
  7)   -0.20406E 00 -0.10003E 01 -0.50311E 00 -0.48126E 00

ONE-DIMENSIONAL SEARCH
INITIAL SLOPE = -0.3750E 01  PROPOSED ALPHA =  0.3294E-01
```

```
* * CONSTRAINED ONE-DIMENSIONAL SEARCH INFORMATION * * *

   PROPOSED DESIGN
   ALPHA = 0.32936E-01
   X-VECTOR
 0.6623E 00  0.4167E 00  0.2917E 00  0.6557E-06  0.5960E-07  0.5819E 00  0.7372E 00  0.5286E-01
 0.3545E 00  0.2496E 00
         PEAK CALLED; NORM OF A=  0.6379D 01, SERIES FOR PHI CONTAINED  7 TERMS

   OBJ =  0.27267E 01

   CONSTRAINT VALUES
-0.1000E 01 -0.1000E 01 -0.4942E 00 -0.1400E 01 -0.1770E 01 -0.6205E 00 -0.1000E 01 -0.1000E 01
-0.1000E 01  0.0        -0.8114E 00 -0.2678E 01 -0.1621E 01 -0.3787E 00 -0.7343E 00 -0.1266E 01
 0.3167E 00 -0.2317E 01

   TWO-POINT INTERPOLATION


   PROPOSED DESIGN
   ALPHA = 0.50920E-01
   X-VECTOR
 0.6585E 00  0.4095E 00  0.2787E 00  0.6557E-06  0.5960E-07  0.5739E 00  0.7336E 00  0.3487E-01
 0.3455E 00  0.2409E 00
         PEAK CALLED; NORM OF A=  0.6379D 01, SERIES FOR PHI CONTAINED  7 TERMS

   OBJ =  0.26531E 01

   CONSTRAINT VALUES
-0.1000E 01 -0.1000E 01 -0.4942E 00 -0.1400E 01 -0.1770E 01 -0.6205E 00 -0.9999E 00 -0.1000E 01
-0.1000E 01  0.0        -0.8142E 00 -0.2638E 01 -0.1606E 01 -0.3940E 00 -0.7311E 00 -0.1269E 01
 0.1629E 00 -0.2163E 01

   THREE-POINT INTERPOLATION


   PROPOSED DESIGN
   ALPHA = 0.85792E-01
   X-VECTOR
 0.6510E 00  0.3953E 00  0.2537E 00  0.6557E-06  0.5960E-07  0.5585E 00  0.7264E 00  0.1863E-07
 0.3279E 00  0.2242E 00
         PEAK CALLED; NORM OF A=  0.6379D 01, SERIES FOR PHI CONTAINED  7 TERMS

   OBJ =  0.24986E 01

   CONSTRAINT VALUES
-0.1000E 01 -0.1000E 01 -0.4942E 00 -0.1400E 01 -0.1770E 01 -0.6205E 00 -0.9998E 00 -0.1000E 01
-0.1022E 01  0.3073E 00 -0.8202E 00 -0.2553E 01 -0.1572E 01 -0.4278E 00 -0.7231E 00 -0.1277E 01
-0.2673E 01  0.6730E 00

   * * * END OF ONE-DIMENSIONAL SEARCH

   CALCULATED ALPHA =   0.50920E-01

   OBJ =   0.26531E 01

   DECISION VARIABLES (X-VECTOR)
     1)    0.65848E 00  0.40946E 00  0.27874E 00  0.65565E-06  0.59605E-07  0.57394E 00
     7)    0.73356E 00  0.34872E-01  0.34546E 00  0.24055E 00

   CONSTRAINT VALUES (G-VECTOR)
     1)   -0.10000E 01 -0.99999E 00 -0.49418E 00 -0.13997E 01 -0.17704E 01 -0.62049E 00
     7)   -0.99995E 00 -0.10000E 01 -0.10000E 01  0.0        -0.81419E 00 -0.26384E 01
    13)   -0.16060E 01 -0.39396E 00 -0.73111E 00 -0.12689E 01  0.16286E 00 -0.21629E 01
```

```
BEGIN ITERATION NUMBER     4

CT =   -0.10000E 00      CTL =  -0.10000E-01      PHI =   0.50000E 03
       PEAK CALLED; NORM OF A=   0.63790 01, SERIES FOR PHI CONTAINED   7 TERMS
       PEAK CALLED; NORM OF A=   0.63790 01, SERIES FOR PHI CONTAINED   7 TERMS
       PEAK CALLED; NORM OF A=   0.63790 01, SERIES FOR PHI CONTAINED   7 TERMS
       PEAK CALLED; NORM OF A=   0.63790 01, SERIES FOR PHI CONTAINED   7 TERMS
       PEAK CALLED; NORM OF A=   0.63790 01, SERIES FOR PHI CONTAINED   7 TERMS
       PEAK CALLED; NORM OF A=   0.63790 01, SERIES FOR PHI CONTAINED   7 TERMS
       PEAK CALLED; NORM OF A=   0.63790 01, SERIES FOR PHI CONTAINED   7 TERMS
       PEAK CALLED; NORM OF A=   0.63790 01, SERIES FOR PHI CONTAINED   7 TERMS
       PEAK CALLED; NORM OF A=   0.63790 01, SERIES FOR PHI CONTAINED   7 TERMS
       PEAK CALLED; NORM OF A=   0.63790 01, SERIES FOR PHI CONTAINED   7 TERMS

THERE ARE    1 ACTIVE CONSTRAINTS
CONSTRAINT NUMBERS ARE
   10

THERE ARE    1 VIOLATED CONSTRAINTS
CONSTRAINT NUMBERS ARE
   17

THERE ARE    2 ACTIVE SIDE CONSTRAINTS
DECISION VARIABLES AT LOWER OR UPPER BOUNDS (MINUS INDICATES LOWER BOUND)
   -4   -5

GRADIENT OF OBJ
  1)    0.32291E 00  0.62017E 00  0.11280E 01  0.16376E 02  0.17310E 01  0.69838E 00
  7)    0.32711E 00  0.18815E 01  0.77991E 00  0.70801E 00

GRADIENTS OF ACTIVE AND VIOLATED CONSTRAINTS
CONSTRAINT NUMBER   10
  1)    0.0          0.0          0.0          0.0          0.0          0.0
  7)    0.0          0.0          0.0          0.0

CONSTRAINT NUMBER   17
  1)   -0.30537E 00  0.50664E 00  0.25531E 00  0.25094E 01  0.12721E 00  0.18150E 00
  7)    0.12651E 00  0.72623E 01  0.75579E 00 -0.13719E 01

SIDE CONSTRAINT ON VARIABLE    4
  1)    0.0          0.0          0.0         -0.10000E 01  0.0          0.0
  7)    0.0          0.0          0.0          0.0

SIDE CONSTRAINT ON VARIABLE    5
  1)    0.0          0.0          0.0          0.0         -0.10000E 01  0.0
  7)    0.0          0.0          0.0          0.0


PUSH-OFF FACTORS, (THETA(I), I=1,NAC)
  1)    0.14473E 00  0.10000E 01  0.0          0.0

CONSTRAINT PARAMETER, BETA =   0.43284E-02

SEARCH DIRECTION (S-VECTOR)
  1)   -0.17163E 00 -0.32962E 00 -0.59952E 00  0.0          0.0         -0.37118E 00
  7)   -0.17386E 00 -0.10000E 01 -0.41452E 00 -0.37630E 00

ONE-DIMENSIONAL SEARCH
INITIAL SLOPE = -0.3723E 01  PROPOSED ALPHA =  0.2196E-01
```

```
* * CONSTRAINED ONE-DIMENSIONAL SEARCH INFORMATION * * *

   PROPOSED DESIGN
   ALPHA = 0.21959E-01
   X-VECTOR
 0.6547E 00  0.4022E 00  0.2656E 00  0.6557E-06  0.5960E-07  0.5658E 00  0.7297E 00  0.1291E-01
 0.3364E 00  0.2327E 00
        PEAK CALLED; NORM OF A=  0.6379D 01, SERIES FOR PHI CONTAINED  7 TERMS

   OBJ =  0.25670E 01

   CONSTRAINT VALUES
-0.1000E 01 -0.1000E 01 -0.4942E 00 -0.1400E 01 -0.1770E 01 -0.6205E 00 -0.9959E 00 -0.1000E 01
-0.1003E 01  0.1132E 00 -0.8177E 00 -0.2588E 01 -0.1586E 01 -0.4135E 00 -0.7270E 00 -0.1273E 01
 0.8402E-01 -0.2034E 01

   TWO-POINT INTERPOLATION


   PROPOSED DESIGN
   ALPHA = 0.34872E-01
   X-VECTOR
 0.6525E 00  0.3980E 00  0.2578E 00  0.6557E-06  0.5960E-07  0.5610E 00  0.7275E 00  0.7451E-08
 0.3310E 00  0.2278E 00
        PEAK CALLED; NORM OF A=  0.63790 01, SERIES FOR PHI CONTAINED  7 TERMS

   OBJ =  0.25127E 01

   CONSTRAINT VALUES
-0.1000E 01 -0.1000E 01 -0.4942E 00 -0.1400E 01 -0.1770E 01 -0.6205E 00 -0.9998E 00 -0.1000E 01
-0.1021E 01  0.2976E 00 -0.8201E 00 -0.2554E 01 -0.1574E 01 -0.4263E 00 -0.7241E 00 -0.1276E 01
-0.2639E 01  0.6391E 00

   THREE-POINT INTERPOLATION


   PROPOSED DESIGN
   ALPHA = 0.22735E-02
   X-VECTOR
 0.6581E 00  0.4037E 00  0.2774E 00  0.6557E-06  0.5960E-07  0.5731E 00  0.7332E 00  0.3260E-01
 0.3445E 00  0.2401E 00
*** I M S L(UERTST) ***  TERMINAL                    EQRH3F      6 (IER = 134)
*** I M S L(UERTST) ***  TERMINAL                    EIGRF       6 (IER = 134)
*** I M S L(UERTST) ***  TERMINAL                    LEQT1C      1 (IER = 129)
*** I M S L(UERTST) ***  TERMINAL                    LEQT2C      1 (IER = 129)
        PEAK CALLED; NORM OF A=  0.63790 01, SERIES FOR PHI CONTAINED  7 TERMS

   OBJ = -0.13440E 01

   CONSTRAINT VALUES
-0.9825E 21  0.7763E 21  0.2227E 22 -0.1760E 22 -0.4648E 21  0.2290E 21  0.3906E 22 -0.1924E 22
-0.7512E 22  0.1067E 24  0.9469E 21 -0.1345E 23  0.4140E 22 -0.4140E 22 -0.1133E 22  0.1133E 22
-0.6053E 23  0.6053E 23

   * * * END OF ONE-DIMENSIONAL SEARCH

   CALCULATED ALPHA =   0.21959E-01

   OBJ =   0.25670E 01

   DECISION VARIABLES (X-VECTOR)
     1)     0.65471E 00  0.40222E 00  0.26557E 00  0.65565E-06  0.59605E-07  0.56578E 00
     7)     0.72974E 00  0.12913E-01  0.33636E 00  0.23268E 00

   CONSTRAINT VALUES (G-VECTOR)
     1)    -0.10000E 01 -0.99999E 00 -0.49418E 00 -0.13997E 01 -0.17704E 01 -0.62049E 00
     7)    -0.99992E 00 -0.10000E 01 -0.10080E 01  0.11317E 00 -0.81773E 00 -0.25882E 01
    13)    -0.15865E 01 -0.41351E 00 -0.72704E 00 -0.12730E 01  0.84021E-01 -0.20640E 01
```

```
BEGIN ITERATION NUMBER     5

CT =  -0.10000E 00      CTL =  -0.10000E-01      PHI =   0.10000E 04
      PEAK CALLED; NORM OF A=   0.63790 01, SERIES FOR PHI CONTAINED   7 TERMS
      PEAK CALLED; NORM OF A=   0.63790 01, SERIES FOR PHI CONTAINED   7 TERMS
      PEAK CALLED; NORM OF A=   0.63790 01, SERIES FOR PHI CONTAINED   7 TERMS
      PEAK CALLED; NORM OF A=   0.63790 01, SERIES FOR PHI CONTAINED   7 TERMS
      PEAK CALLED; NORM OF A=   0.63790 01, SERIES FOR PHI CONTAINED   7 TERMS
      PEAK CALLED; NORM OF A=   0.63790 01, SERIES FOR PHI CONTAINED   7 TERMS
      PEAK CALLED; NORM OF A=   0.63790 01, SERIES FOR PHI CONTAINED   7 TERMS
      PEAK CALLED; NORM OF A=   0.63790 01, SERIES FOR PHI CONTAINED   7 TERMS
      PEAK CALLED; NORM OF A=   0.63790 01, SERIES FOR PHI CONTAINED   7 TERMS
      PEAK CALLED; NORM OF A=   0.63790 01, SERIES FOR PHI CONTAINED   7 TERMS

THERE ARE     0 ACTIVE CONSTRAINTS

THERE ARE     2 VIOLATED CONSTRAINTS
CONSTRAINT NUMBERS ARE
   10   17

THERE ARE     2 ACTIVE SIDE CONSTRAINTS
DECISION VARIABLES AT LOWER OR UPPER BOUNDS (MINUS INDICATES LOWER BOUND)
   -4   -5

GRADIENT OF OBJ
  1)     0.32253E 00  0.62189E 00  0.11440E 01  0.16379E 02  0.17440E 01  0.70963E 00
  7)     0.33607E 00  0.21452E 01  0.78115E 00  0.69666E 00

GRADIENTS OF ACTIVE AND VIOLATED CONSTRAINTS
CONSTRAINT NUMBER    10
  1)     0.72336E-01  0.85362E 00 -0.42829E 00 -0.12719E 01 -0.21175E 00 -0.20549E 00
  7)     0.48679E-01 -0.80704E 01 -0.18130E 00 -0.10111E 01

CONSTRAINT NUMBER    17
  1)    -0.26569E 00  0.99928E 00  0.11161E 00  0.23677E 01  0.82308E-01  0.11052E 00
  7)     0.18254E 00  0.22379E 01  0.69529E 00 -0.17592E 01

SIDE CONSTRAINT ON VARIABLE     4
  1)     0.0          0.0          0.0         -0.10000E 01  0.0          0.0
  7)     0.0          0.0          0.0          0.0

SIDE CONSTRAINT ON VARIABLE     5
  1)     0.0          0.0          0.0          0.0         -0.10000E 01  0.0
  7)     0.0          0.0          0.0          0.0


PUSH-OFF FACTORS, (THETA(I), I=1,NAC)
  1)     0.10000E 01  0.74522E 00  0.0          0.0

CONSTRAINT PARAMETER, BETA =   0.58229E 00

SEARCH DIRECTION (S-VECTOR)
  1)     0.11042E 00 -0.61857E 00  0.29071E-01  0.57636E-06 -0.42981E-08 -0.14491E-01
  7)    -0.93709E-01  0.41379E 00 -0.29074E 00  0.10000E 01

ONE-DIMENSIONAL SEARCH
INITIAL SLOPE =  0.9956E 00  PROPOSED ALPHA =  0.4946E-01
```

```
* * CONSTRAINED ONE-DIMENSIONAL SEARCH INFORMATION * * *

   PROPOSED DESIGN
   ALPHA = 0.49460E-01
   X-VECTOR
 0.6602E 00  0.3716E 00  0.2668E 00  0.6842E-06  0.5960E-07  0.5651E 00  0.7251E 00  0.3338E-01
 0.3220E 00  0.2821E 00
         PEAK CALLED; NORM OF A=  0.6379D 01, SERIES FOR PHI CONTAINED  7 TERMS

   OBJ =  0.26127E 01

   CONSTRAINT VALUES
-0.1000E 01 -0.1000E 01 -0.4942E 00 -0.1400E 01 -0.1770E 01 -0.6205E 00 -0.9958E 00 -0.1000E 01
-0.1000E 01  0.0        -0.8161E 00 -0.2611E 01 -0.1596E 01 -0.4043E 00 -0.7228E 00 -0.1277E 01
 0.6306E-01 -0.2063E 01

   * * * END OF ONE-DIMENSIONAL SEARCH

   CALCULATED ALPHA =   0.49460E-01

   OBJ =   0.261274E 01

   DECISION VARIABLES (X-VECTOR)
     1)     0.66017E 00  0.37163E 00  0.26681E 00  0.68416E-06  0.59605E-07  0.56507E 00
     7)     0.72511E 00  0.33379E-01  0.32198E 00  0.28214E 00

   CONSTRAINT VALUES (G-VECTOR)
     1)   -0.10000E 01 -0.99999E 00 -0.49418E 00 -0.13997E 01 -0.17704E 01 -0.62049E 00
     7)   -0.99983E 00 -0.10001E 01 -0.10000E 01  0.0         -0.81611E 00 -0.26113E 01
    13)   -0.15957E 01 -0.40434E 00 -0.72282E 00 -0.12772E 01  0.63065E-01 -0.20631E 01
```

```
BEGIN ITERATION NUMBER    6

CT =   -0.10000E 00      CTL =  -0.10000E-01      PHI =   0.10000E 04
       PEAK CALLED; NORM OF A=   0.63790 01, SERIES FOR PHI CONTAINED  7 TERMS
       PEAK CALLED; NORM OF A=   0.63790 01, SERIES FOR PHI CONTAINED  7 TERMS
       PEAK CALLED; NORM OF A=   0.63790 01, SERIES FOR PHI CONTAINED  7 TERMS
       PEAK CALLED; NORM OF A=   0.63790 01, SERIES FOR PHI CONTAINED  7 TERMS
       PEAK CALLED; NORM OF A=   0.63790 01, SERIES FOR PHI CONTAINED  7 TERMS
       PEAK CALLED; NORM OF A=   0.63790 01, SERIES FOR PHI CONTAINED  7 TERMS
       PEAK CALLED; NORM OF A=   0.63790 01, SERIES FOR PHI CONTAINED  7 TERMS
       PEAK CALLED; NORM OF A=   0.63790 01, SERIES FOR PHI CONTAINED  7 TERMS
       PEAK CALLED; NORM OF A=   0.63790 01, SERIES FOR PHI CONTAINED  7 TERMS

THERE ARE    1 ACTIVE CONSTRAINTS
CONSTRAINT NUMBERS ARE
   10

THERE ARE    1 VIOLATED CONSTRAINTS
CONSTRAINT NUMBERS ARE
   17

THERE ARE    2 ACTIVE SIDE CONSTRAINTS
DECISION VARIABLES AT LOWER OR UPPER BOUNDS (MINUS INDICATES LOWER BOUND)
   -4   -5

GRADIENT OF OBJ
  1)     0.31185E 00  0.66347E 00  0.11419E 01  0.16385E 02  0.17460E 01  0.70581E 00
  7)     0.33188E 00  0.19408E 01  0.80824E 00  0.62885E 00

GRADIENTS OF ACTIVE AND VIOLATED CONSTRAINTS
CONSTRAINT NUMBER   10
  1)     0.0          0.0          0.0          0.0          0.0          0.0
  7)     0.0          0.0          0.0          0.0

CONSTRAINT NUMBER   17
  1)    -0.27567E 00  0.38420E 00  0.26305E 00  0.25578E 01  0.12487E 00  0.17990E 00
  7)     0.10376E 00  0.86340E 01  0.72807E 00 -0.10122E 01

SIDE CONSTRAINT ON VARIABLE    4
  1)     0.0          0.0          0.0         -0.10000E 01  0.0          0.0
  7)     0.0          0.0          0.0          0.0

SIDE CONSTRAINT ON VARIABLE    5
  1)     0.0          0.0          0.0          0.0         -0.10000E 01  0.0
  7)     0.0          0.0          0.0          0.0


PUSH-OFF FACTORS, (THETA(I), I=1,NAC)
  1)     0.37608E 00  0.10000E 01  0.0          0.0

CONSTRAINT PARAMETER, EETA =   0.0

SEARCH DIRECTION (S-VECTOR)
  1)    -0.16068E 00 -0.34185E 00 -0.58837E 00  0.0          0.0         -0.36367E 00
  7)    -0.17100E 00 -0.10000E 01 -0.41644E 00 -0.32401E 00

ONE-DIMENSIONAL SEARCH
INITIAL SLOPE = -0.3743E 01  PROPOSED ALPHA =  0.7059E-02
```

```
* * CONSTRAINED ONE-DIMENSIONAL SEARCH INFORMATION * * *

   PROPOSED DESIGN
   ALPHA = 0.70588E-02
   X-VECTOR
 0.6590E 00  0.3692E 00  0.2627E 00  0.6842E-06  0.5960E-07  0.5625E 00  0.7239E 00  0.2632E-01
 0.3190E 00  0.2799E 00
         PEAK CALLED; NORM OF A=  0.6379D 01, SERIES FOR PHI CONTAINED  7 TERMS

   OBJ =  0.25856E 01

   CONSTRAINT VALUES
-0.1000E 01 -0.1000E 01 -0.4942E 00 -0.1400E 01 -0.1770E 01 -0.6205E 00 -0.9998E 00 -0.1000E 01
-0.1000E 01  0.0        -0.8172E 00 -0.2595E 01 -0.1590E 01 -0.4104E 00 -0.7215E 00 -0.1278E 01
 0.1797E-01 -0.2018E 01

   TWO-POINT INTERPOLATION


   PROPOSED DESIGN
   ALPHA = 0.98718E-02
   X-VECTOR
 0.6586E 00  0.3683E 00  0.2610E 00  0.6842E-06  0.5960E-07  0.5615E 00  0.7234E 00  0.2351E-01
 0.3179E 00  0.2789E 00
         PEAK CALLED; NORM OF A=  0.6379D 01, SERIES FOR PHI CONTAINED  7 TERMS

   OBJ =  0.25746E 01

   CONSTRAINT VALUES
-0.1000E 01 -0.1000E 01 -0.4942E 00 -0.1400E 01 -0.1770E 01 -0.6205E 00 -0.9998E 00 -0.1000E 01
-0.1000E 01  0.3849E-02 -0.8177E 00 -0.2588E 01 -0.1587E 01 -0.4129E 00 -0.7209E 00 -0.1279E 01
 0.3437E-02 -0.2003E 01

   * * * END OF ONE-DIMENSIONAL SEARCH

   CALCULATED ALPHA =   0.98718E-02

   OBJ =   0.257460E 01

   DECISION VARIABLES (X-VECTOR)
     1)    0.65859E 00  0.36825E 00  0.26100E 00  0.68416E-06  0.59605E-07  0.56148E 00
     7)    0.72342E 00  0.23507E-01  0.31787E 00  0.27854E 00

   CONSTRAINT VALUES (G-VECTOR)
     1)   -0.10000E 01 -0.99959E 00 -0.49418E 00 -0.13997E 01 -0.17704E 01 -0.62049E 00
     7)   -0.99976E 00 -0.10001E 01 -0.10003E 01  0.38487E-02 -0.81772E 00 -0.25884E 01
    13)   -0.15871E 01 -0.41288E 00 -0.72095E 00 -0.12791E 01  0.34367E-02 -0.20034E 01
```

```
BEGIN ITERATION NUMBER     7

CT =  -0.10000E 00      CTL =  -0.10000E-01      PHI =   0.10000E 04
      PEAK CALLED; NORM OF A=   0.63790 01, SERIES FOR PHI CONTAINED   7 TERMS
      PEAK CALLED; NORM OF A=   0.63790 01, SERIES FOR PHI CONTAINED   7 TERMS
      PEAK CALLED; NORM OF A=   0.63790 01, SERIES FOR PHI CONTAINED   7 TERMS
      PEAK CALLED; NORM OF A=   0.63790 01, SERIES FOR PHI CONTAINED   7 TERMS
      PEAK CALLED; NORM OF A=   0.63790 01, SERIES FOR PHI CONTAINED   7 TERMS
      PEAK CALLED; NORM OF A=   0.63790 01, SERIES FOR PHI CONTAINED   7 TERMS
      PEAK CALLED; NORM OF A=   0.63790 01, SERIES FOR PHI CONTAINED   7 TERMS
      PEAK CALLED; NORM OF A=   0.63790 01, SERIES FOR PHI CONTAINED   7 TERMS
      PEAK CALLED; NORM OF A=   0.63790 01, SERIES FOR PHI CONTAINED   7 TERMS
      PEAK CALLED; NORM OF A=   0.63790 01, SERIES FOR PHI CONTAINED   7 TERMS

THERE ARE    2 ACTIVE CONSTRAINTS
CONSTRAINT NUMBERS ARE
   10   17

THERE ARE    0 VIOLATED CONSTRAINTS

THERE ARE    2 ACTIVE SIDE CONSTRAINTS
DECISION VARIABLES AT LOWER OR UPPER BOUNDS (MINUS INDICATES LOWER BOUND)
  -4   -5

GRADIENT OF OBJ
  1)    0.31137E 00  0.66566E 00  0.11494E 01  0.16387E 02  0.17524E 01  0.71087E 00
  7)    0.33560E 00  0.20506E 01  0.80967E 00  0.61998E 00

GRADIENTS OF ACTIVE AND VIOLATED CONSTRAINTS
CONSTRAINT NUMBER   10
  1)    0.15990E-01  0.24702E 00 -0.95401E-01 -0.29731E 00 -0.43521E-01 -0.44155E-01
  7)    0.19187E-01 -0.38487E 00 -0.41920E-01 -0.15561E 00

CONSTRAINT NUMBER   17
  1)   -0.25744E 00  0.68133E 00  0.19312E 00  0.24556E 01  0.10515E 00  0.14732E 00
  7)    0.13997E 00  0.57586E 01  0.69742E 00 -0.10935E 01

SIDE CONSTRAINT ON VARIABLE    4
  1)    0.0          0.0          0.0         -0.10000E 01  0.0          0.0
  7)    0.0          0.0          0.0          0.0

SIDE CONSTRAINT ON VARIABLE    5
  1)    0.0          0.0          0.0          0.0         -0.10000E 01  0.0
  7)    0.0          0.0          0.0          0.0


PUSH-OFF FACTORS, (THETA(I), I=1,NAC)
  1)    0.10785E 01  0.10699E 01  0.0          0.0

CONSTRAINT PARAMETER, BETA =   0.14108E 00

SEARCH DIRECTION (S-VECTOR)
  1)   -0.22238E 00 -0.10000E 01 -0.44026E 00  0.68576E-06 -0.13715E-05 -0.30889E 00
  7)   -0.24449E 00 -0.25638E 00 -0.37246E 00  0.19207E-01

ONE-DIMENSIONAL SEARCH
INITIAL SLOPE = -0.2358E 01  PROPOSED ALPHA =  0.5459E-01
```

```
* * CONSTRAINED ONE-DIMENSIONAL SEARCH INFORMATION * * *

   PROPOSED DESIGN
   ALPHA = 0.54594E-01
   X-VECTOR
 0.6464E 00  0.3137E 00  0.2370E 00  0.7216E-06  0.5960E-07  0.5446E 00  0.7161E 00  0.9510E-02
 0.2975E 00  0.2800E 00
         PEAK CALLED; NORM OF A=  0.63790 01, SERIES FOR PHI CONTAINED  7 TERMS

   OBJ =  0.24412E 01

   CONSTRAINT VALUES
-0.1000E 01 -0.1000E 01 -0.4942E 00 -0.1400E 01 -0.1770E 01 -0.6205E 00 -0.9992E 00 -0.1000E 01
-0.1004E 01  0.5565E-01 -0.8212E 00 -0.2538E 01 -0.1561E 01 -0.4388E 00 -0.7154E 00 -0.1285E 01
-0.1093E 00 -0.1891E 01

   TWO-POINT INTERPOLATION


   PROPOSED DESIGN
   ALPHA = 0.91688E-01
   X-VECTOR
 0.6382E 00  0.2766E 00  0.2206E 00  0.7470E-06  0.5960E-07  0.5332E 00  0.7010E 00  0.7451E-08
 0.2837E 00  0.2807E 00
         PEAK CALLED; NORM OF A=  0.63790 01, SERIES FOR PHI CONTAINED  7 TERMS

   OBJ =  0.23457E 01

   CONSTRAINT VALUES
-0.1000E 01 -0.1000E 01 -0.4942E 00 -0.1400E 01 -0.1770E 01 -0.6205E 00 -0.9982E 00 -0.1001E 01
-0.1010E 01  0.1450E 00 -0.8242E 00 -0.2497E 01 -0.1543E 01 -0.4574E 00 -0.7110E 00 -0.1289E 01
-0.1883E 01 -0.1172E 00

   THREE-POINT INTERPOLATION


   PROPOSED DESIGN
   ALPHA = 0.50590E-01
   X-VECTOR
 0.6473E 00  0.3177E 00  0.2387E 00  0.7189E-06  0.5960E-07  0.5459E 00  0.7110E 00  0.1054E-01
 0.2950E 00  0.2799E 00
         PEAK CALLED; NORM OF A=  0.63790 01, SERIES FOR PHI CONTAINED  7 TERMS

   OBJ =  0.24512E 01

   CONSTRAINT VALUES
-0.1000E 01 -0.1000E 01 -0.4942E 00 -0.1400E 01 -0.1770E 01 -0.6205E 00 -0.9992E 00 -0.1000E 01
-0.1003E 01  0.4926E-01 -0.8210E 00 -0.2542E 01 -0.1563E 01 -0.4368E 00 -0.7158E 00 -0.1284E 01
-0.1019E 00 -0.1898E 01

   * * * END OF ONE-DIMENSIONAL SEARCH

   CALCULATED ALPHA =   0.0

   OBJ =   0.257460E 01     NO CHANGE IN OBJ

   DECISION VARIABLES (X-VECTOR)
     1)    0.65859E 00  0.36825E 00  0.26100E 00  0.68416E-06  0.59605E-07  0.56148E 00
     7)    0.72342E 00  0.23507E-01  0.31787E 00  0.27894E 00

   CONSTRAINT VALUES (G-VECTOR)
     1)   -0.10000E 01 -0.99999E 00 -0.49418E 00 -0.13997E 01 -0.17704E 01 -0.62049E 00
     7)   -0.99976E 00 -0.10001E 01 -0.10003E 01  0.38487E-02 -0.81772E 00 -0.25884E 01
    13)   -0.15871E 01 -0.41288E 00 -0.72095E 00 -0.12791E 01  0.34367E-02 -0.20034E 01
```

```
BEGIN ITERATION NUMBER     8

CT =  -0.34200E-01      CTL =  -0.46416E-02      PHI =    0.10000E 04

THERE ARE     2 ACTIVE CONSTRAINTS
CONSTRAINT NUMBERS ARE
   10   17

THERE ARE     0 VIOLATED CONSTRAINTS

THERE ARE     2 ACTIVE SIDE CONSTRAINTS
DECISION VARIABLES AT LOWER OR UPPER BOUNDS (MINUS INDICATES LOWER BOUND)
   -4    -5

GRADIENT OF OBJ
  1)     0.31137E 00  0.66566E 00  0.11494E 01  0.16387E 02  0.17524E 01  0.71087E 00
  7)     0.33560E 00  0.20506E 01  0.80967E 00  0.61998E 00

GRADIENTS OF ACTIVE AND VIOLATED CONSTRAINTS
CONSTRAINT NUMBER    10
  1)     0.27542E-01  0.42547E 00 -0.16432E 00 -0.51208E 00 -0.74561E-01 -0.76053E-01
  7)     0.33047E-01 -0.66290E 00 -0.72204E-01 -0.26802E 00

CONSTRAINT NUMBER    17
  1)    -0.39966E-01  0.10577E 00  0.29980E-01  0.38122E 00  0.16324E-01  0.22871E-01
  7)     0.21730E-01  0.89397E 00  0.10827E 00 -0.16976E 00

SIDE CONSTRAINT ON VARIABLE     4
  1)     0.0          0.0          0.0          -0.10000E 01  0.0          0.0
  7)     0.0          0.0          0.0           0.0

SIDE CONSTRAINT ON VARIABLE     5
  1)     0.0          0.0          0.0          0.0          -0.10000E 01  0.0
  7)     0.0          0.0          0.0          0.0


PUSH-OFF FACTORS, (THETA(I), I=1,NAC)
  1)     0.12377E 01  0.12111E 01  0.0          0.0

CONSTRAINT PARAMETER, BETA =    0.13710E 00

SEARCH DIRECTION (S-VECTOR)
  1)    -0.22062E 00 -0.10000E 01 -0.43101E 00  0.0          -0.13866E-05 -0.30344E 00
  7)    -0.24263E 00 -0.23608E 00 -0.36639E 00  0.26039E-01

ONE-DIMENSIONAL SEARCH
INITIAL SLOPE = -0.2291E 01  PROPOSED ALPHA =  0.8201E-02
```

```
* * CONSTRAINED ONE-DIMENSIONAL SEARCH INFORMATION * * *

   PROPOSED DESIGN
   ALPHA = 0.82015E-02
   X-VECTOR
 0.6568E 00  0.3600E 00  0.2575E 00  0.6842E-06  0.5960E-07  0.5590E 00  0.7214E 00  0.2157E-01
 0.3149E 00  0.2792E 00
         PEAK CALLED; NORM OF A=  0.63790 01, SERIES FOR PHI CONTAINED  7 TERMS

   OBJ =  0.25556E 01

   CONSTRAINT VALUES
-0.1000E 01 -0.1000E 01 -0.4942E 00 -0.1400E 01 -0.1770E 01 -0.6205E 00 -0.9957E 00 -0.1000E 01
-0.1000E 01  0.6808E-02 -0.8182E 00 -0.2582E 01 -0.1583E 01 -0.4165E 00 -0.7202E 00 -0.1280E 01
-0.1438E-01 -0.1986E 01

   TWO-POINT INTERPOLATION


   PROPOSED DESIGN
   ALPHA = 0.41007E-01
   X-VECTOR
 0.6495E 00  0.3272E 00  0.2433E 00  0.6842E-06  0.5960E-07  0.5490E 00  0.7135E 00  0.1383E-01
 0.3028E 00  0.2800E 00
         PEAK CALLED; NORM OF A=  0.63790 01, SERIES FOR PHI CONTAINED  7 TERMS

   OBJ =  0.24780E 01

   CONSTRAINT VALUES
-0.1000E 01 -0.1000E 01 -0.4942E 00 -0.1400E 01 -0.1770E 01 -0.6205E 00 -0.9994E 00 -0.1000E 01
-0.1002E 01  0.2994E-01 -0.8201E 00 -0.2554E 01 -0.1569E 01 -0.4315E 00 -0.7170E 00 -0.1283E 01
-0.8070E-01 -0.1919E 01

   THREE-POINT INTERPOLATION


   PROPOSED DESIGN
   ALPHA = 0.99572E-01
   X-VECTOR
 0.6366E 00  0.2687E 00  0.2181E 00  0.6842E-06  0.5960E-07  0.5313E 00  0.6993E 00  0.1863E-07
 0.2814E 00  0.2815E 00
         PEAK CALLED; NORM OF A=  0.63790 01, SERIES FOR PHI CONTAINED  7 TERMS

   OBJ =  0.23327E 01

   CONSTRAINT VALUES
-0.1000E 01 -0.1000E 01 -0.4942E 00 -0.1400E 01 -0.1770E 01 -0.6205E 00 -0.9981E 00 -0.1001E 01
-0.1010E 01  0.1391E 00 -0.8244E 00 -0.2494E 01 -0.1540E 01 -0.4596E 00 -0.7105E 00 -0.1290E 01
-0.1853E 01 -0.1474E 00

   * * * END OF ONE-DIMENSIONAL SEARCH

   CALCULATED ALPHA =   0.0

   OBJ =   0.257460E 01     NO CHANGE ON OBJ

   DECISION VARIABLES (X-VECTOR)
     1)    0.65859E 00  0.36825E 00  0.26100E 00  0.68416E-06  0.59605E-07  0.56148E 00
     7)    0.72342E 00  0.23507E-01  0.31787E 00  0.27894E 00

   CONSTRAINT VALUES (G-VECTOR)
     1)   -0.13000E 01 -0.99999E 00 -0.49418E 00 -0.13997E 01 -0.17704E 01 -0.62045E 00
     7)   -0.99976E 00 -0.10001E 01 -0.10033E 01  0.38487E-02 -0.81772E 00 -0.25884E 01
    13)   -0.15871E 01 -0.41268E 00 -0.72095E 00 -0.12791E 01  0.34367E-02 -0.20034E 01
```

```
BEGIN ITERATION NUMBER    9

CT =  -0.11696E-01      CTL =  -0.21544E-02      PHI =   0.50000E 01
      PEAK CALLED; NORM OF A=  0.63790 01, SERIES FOR PHI CONTAINED  7 TERMS
      PEAK CALLED; NORM OF A=  0.63790 01, SERIES FOR PHI CONTAINED  7 TERMS
      PEAK CALLED; NORM OF A=  0.63790 01, SERIES FOR PHI CONTAINED  7 TERMS
      PEAK CALLED; NORM OF A=  0.63790 01, SERIES FOR PHI CONTAINED  7 TERMS
      PEAK CALLED; NORM OF A=  0.63790 01, SERIES FOR PHI CONTAINED  7 TERMS
      PEAK CALLED; NORM OF A=  0.63790 01, SERIES FOR PHI CONTAINED  7 TERMS
      PEAK CALLED; NORM OF A=  0.63790 01, SERIES FOR PHI CONTAINED  7 TERMS
      PEAK CALLED; NORM OF A=  0.63790 01, SERIES FOR PHI CONTAINED  7 TERMS
      PEAK CALLED; NORM OF A=  0.63790 01, SERIES FOR PHI CONTAINED  7 TERMS

THERE ARE    2 ACTIVE CONSTRAINTS
CONSTRAINT NUMBERS ARE
   10   17

THERE ARE    0 VIOLATED CONSTRAINTS

THERE ARE    2 ACTIVE SIDE CONSTRAINTS
DECISION VARIABLES AT LOWER OR UPPER BOUNDS (MINUS INDICATES LOWER BOUND)
   -4   -5

GRADIENT OF OBJ
  1)    0.31128E 00  0.66557E 00  0.11493E 01  0.16387E 02  0.17523E 01  0.71077E 00
  7)    0.33550E 00  0.20505E 01  0.80957E 00  0.61985E 00

GRADIENTS OF ACTIVE AND VIOLATED CONSTRAINTS
CONSTRAINT NUMBER   10
  1)    0.15990E-01  0.24702E 00 -0.95401E-01 -0.29731E 00 -0.43521E-01 -0.44155E-01
  7)    0.19187E-01 -0.38487E 00 -0.41920E-01 -0.15561E 00

CONSTRAINT NUMBER   17
  1)   -0.25744E 00  0.68153E 00  0.19307E 00  0.24556E 01  0.10515E 00  0.14732E 00
  7)    0.13997E 00  0.57586E 01  0.69742E 00 -0.10936E 01

SIDE CONSTRAINT ON VARIABLE    4
  1)    0.0          0.0          0.0         -0.10000E 01  0.0          0.0
  7)    0.0          0.0          0.0          0.0

SIDE CONSTRAINT ON VARIABLE    5
  1)    0.0          0.0          0.0          0.0         -0.10000E 01  0.0
  7)    0.0          0.0          0.0          0.0


PUSH-OFF FACTORS, (THETA(I), I=1,NAC)
  1)    0.17664E 01  0.16740E 01  0.0          0.0

CONSTRAINT PARAMETER, BETA =   0.12536E 00

SEARCH DIRECTION IS-VECTOR)
  1)   -0.21538E 00 -0.10000E 01 -0.40374E 00  0.72196E-06 -0.14439E-05 -0.28733E 00
  7)   -0.23709E 00 -0.17624E 00 -0.34849E 00  0.46223E-01

ONE-DIMENSIONAL SEARCH
INITIAL SLOPE = -0.2095E 01  PROPOSED ALPHA =  0.1229E-03
```

```
* * CONSTRAINED ONE-DIMENSIONAL SEARCH INFORMATION * * *

   PROPOSED DESIGN
   ALPHA = 0.12288E-03
   X-VECTOR
 0.6586E 00  0.3681E 00  0.2610E 00  0.6842E-06  0.5960E-07  0.5614E 00  0.7234E 00  0.2349E-01
 0.3178E 00  0.2789E 00
         PEAK CALLED; NORM OF A=  0.6379D 01, SERIES FOR PHI CONTAINED  7 TERMS

   OBJ =  0.25743E 01

   CONSTRAINT VALUES
-0.1000E 01 -0.1000E 01 -0.4942E 00 -0.1400E 01 -0.1770E 01 -0.6205E 00 -0.9998E 00 -0.1000E 01
-0.1000E 01  0.3875E-02 -0.8177E 00 -0.2588E 01 -0.1587E 01 -0.4129E 00 -0.7209E 00 -0.1279E 01
 0.3208E-02 -0.2003E 01

   TWO-POINT INTERPOLATION


   PROPOSED DESIGN
   ALPHA = 0.61440E-03
   X-VECTOR
 0.6585E 00  0.3676E 00  0.2608E 00  0.6846E-06  0.5960E-07  0.5613E 00  0.7233E 00  0.2340E-01
 0.3177E 00  0.2790E 00
         PEAK CALLED; NORM OF A=  0.6379D 01, SERIES FOR PHI CONTAINED  7 TERMS

   OBJ =  0.25733E 01

   CONSTRAINT VALUES
-0.1000E 01 -0.1000E 01 -0.4942E 00 -0.1400E 01 -0.1770E 01 -0.6205E 00 -0.9998E 00 -0.1000E 01
-0.1000E 01  0.3978E-02 -0.8177E 00 -0.2588E 01 -0.1587E 01 -0.4131E 00 -0.7209E 00 -0.1279E 01
 0.2292E-02 -0.2002E 01

   THREE-POINT INTERPOLATION


   PROPOSED DESIGN
   ALPHA = 0.14951E-02
   X-VECTOR
 0.6585E 00  0.3668E 00  0.2604E 00  0.6852E-06  0.5960E-07  0.5610E 00  0.7231E 00  0.2324E-01
 0.3173E 00  0.2790E 00
         PEAK CALLED; NORM OF A=  0.6379D 01, SERIES FOR PHI CONTAINED  7 TERMS

   OBJ =  0.25714E 01

   CONSTRAINT VALUES
-0.1000E 01 -0.1000E 01 -0.4942E 00 -0.1400E 01 -0.1770E 01 -0.6205E 00 -0.9998E 00 -0.1000E 01
-0.1000E 01  0.4165E-02 -0.8178E 00 -0.2587E 01 -0.1587E 01 -0.4135E 00 -0.7208E 00 -0.1279E 01
 0.6477E-03 -0.2001E 01

   * * * END OF ONE-DIMENSIONAL SEARCH

   CALCULATED ALPHA =   0.61440E-03

   OBJ =   0.257330E 01

   DECISION VARIABLES (X-VECTOR)
     1)    0.65845E 00  0.36764E 00  0.26076E 00  0.68460E-06  0.59605E-07  0.56130E 00
     7)    0.72327E 00  0.23399E-01  0.31766E 00  0.27857E 00

   CONSTRAINT VALUES (G-VECTOR)
     1)   -0.10000E 01 -0.99999E 00 -0.49418E 00 -0.13997E 01 -0.17704E 01 -0.62049E 00
     7)   -0.99976E 00 -0.10001E 01 -0.10003E 01  0.39784E-02 -0.81775E 00 -0.25880E 01
    13)   -0.15869E 01 -0.41312E 00 -0.72090E 00 -0.12791E 01  0.22923E-02 -0.20025E 01
```

```
 FINAL OPTIMIZATION INFORMATION

  OBJ =   0.257330E 01

  DECISION VARIABLES (X-VECTOR)
    1)     0.65845E 00  0.36764E 00  0.26076E 00  0.68460E-06  0.59605E-07  0.56130E 00
    7)     0.72327E 00  0.23399E-01  0.31766E 00  0.27897E 00

  CONSTRAINT VALUES (G-VECTOR)
    1)    -0.10000E 01 -0.99999E 00 -0.49418E 00 -0.13997E 01 -0.17704E 01 -0.62049E 00
    7)    -0.99976E 00 -0.10001E 01 -0.10003E 01  0.39784E-02 -0.81775E 00 -0.25880E 01
   13)    -0.15869E 01 -0.41312E 00 -0.72090E 00 -0.12791E 01  0.22923E-02 -0.20023E 01

  THERE ARE    2 ACTIVE CONSTRAINTS
  CONSTRAINT NUMBERS ARE
     10   17

  THERE ARE    0 VIOLATED CONSTRAINTS

  THERE ARE    2 ACTIVE SIDE CONSTRAINTS
  DECISION VARIABLES AT LOWER OR UPPER BOUNDS (MINUS INDICATES LOWER BOUND)
     -4   -5

  TERMINATION CRITERION
       ABS(OBJ(I)-OBJ(I-1))   LESS THAN DABFUN FOR  3 ITERATIONS

  NUMBER OF ITERATIONS =    9

  OBJECTIVE FUNCTION WAS EVALUATED          106  TIMES

  CONSTRAINT FUNCTIONS WERE EVALUATED       106  TIMES
       PEAK CALLED: NORM OF A=  0.6379D 01, SERIES FOR PHI CONTAINED  7 TERMS

**********************************************

   THE G1 GAIN MATRIX

          1              2              3

1   -1.08664000-01 -3.09521290-02 -2.41756470-02
2   -1.11698970-01  1.65445510-02 -2.96640990-02
3    2.36612800-01 -1.47921470-01 -2.51556050-01


   THE G2 GAIN MATRIX

          1              2              3

1    1.47769310 00  5.85737800-02  8.28044590-02
2    1.84393310-01  1.67863970 00  1.01677060-01
3    2.96820570-01  1.15776750-01  8.90768190-01
```

****

THE H MATRIX

	1	2	3
1	3.03181850-01	5.06573390-01	9.44059090-01
2	1.53297570 00	3.45154100-02	-2.60921980-02
3	-1.79746620-01	9.71590650-01	-8.78248270-01

****

THE L MATRIX

	1	2	3
1	-3.58535660-01	-2.82970600-02	-6.81680680-04
2	1.18351990-01	-3.47638790-02	-1.54171070-03
3	8.13313040-01	-3.11267730-01	-2.84976280-01

****

****

FINAL SYSTEM CHARACTERISTICS

THE CHARACTERISTIC POLYNOMIAL - IN ASCENDING POWERS OF S

1.51972970-01 5.51483850 00 1.90491470 01 2.72210060 01 1.95679670 01 7.02191100 00
1.00000000 00

****

THE EIGENVALUES OF THE STATE MATRIX

REAL PART	IMAGINARY PART
-3.06662060-02	0.0
-1.24961080 00	-4.24826580-01
-1.24961080 00	4.24826580-01
-9.11086910-01	0.0
-1.50182670 00	0.0
-2.07511000 00	0.0

****

```
**********************************************
     REQUESTED SETTLING TIME IS      60.000 SECONDS

**********************************************
     SIMULATION RUN TIME =     72.000

     THE INITIAL CONDITION VECTOR
     X( 1)          -1.000
     X( 2)          -1.000
     X( 3)          -1.000
     U( 1)          -1.000
     U( 2)           1.000
     U( 3)           0.0
     STEADY STATE VALUES OF THE OUTPUTS AT      60.000 SECONDS
     Y( 1)           0.000
     Y( 2)          -0.000
     Y( 3)           0.000
     Y( 4)          -0.168
     Y( 5)          -0.000
     Y( 6)           0.000
     Y( 7)           0.000
     Y( 8)           0.000
```

	PEAK VALUES	TIME OF OCCURRANCE
X(1)	0.000	15.65
X(2)	0.000	13.90
X(3)	-0.117	71.95
Y(1)	1.000	68.30
Y(2)	0.017	2.80
Y(3)	0.000	12.55
Y(4)	-0.117	71.95
Y(5)	0.483	71.95
Y(6)	0.000	12.60
Y(7)	0.000	16.25
Y(8)	0.000	14.10
UDOT(1)	1.255	
UDOT(2)	-1.619	
UDOT(3)	-0.120	
U(1)	0.000	
U(2)	1.000	
U(3)	0.000	

MINIMUM INPUT VALUES	
U(1)	-1.000
U(2)	-0.000
U(3)	-0.259

MINIMUM STATE VALUES	
X(1)	-1.000
X(2)	-1.000
X(3)	-1.000

MINIMUM OUTPUT VALUES	
Y(1)	-0.000
Y(2)	-1.208
Y(3)	-0.651
Y(4)	-1.000
Y(5)	-0.000
Y(6)	-0.660
Y(7)	-1.162
Y(8)	-2.182

****

LIST OF REFERENCES

1. Dundics, M., CONSYN - An Optimal Integral Output Controller Design and Analysis Program, M.S. Thesis, Naval Postgraduate School, Monterey, California, 1977.

2. Toney, J. H., A Comparative Analysis of Mathematical Modeling Techniques for Ships With Gas Turbine and CRP Prime Movers, M.S. Thesis, Naval Postgraduate School, Monterey, California, 1977.

3. Miller, M., Multivariable Control of a Marine Boiler, M.S. Thesis, Naval Postgraduate School, Monterey, California, 1978.

4. United Aircraft Research Laboratories Report M941338-2, An Analytical Method for the Synthesis of Nonlinear Multivariable Feedback Control, by G. J. Michael and F. A. Farrar, June 1973.

5. United Aircraft Research Laboratories Report M911620-1, Development of Optimal Control Modes for Advanced Technology Propulsion Systems, by G. J. Michael and F. A. Farrar, August 1973.

INITIAL DISTRIBUTION LIST

		No. Copies
1.	Defense Documentation Center Cameron Station Alexandria, Virginia 22314	2
2.	Library, Code 0142 Naval Postgraduate School Monterey, California 93940	2
3.	Department Chairman, Code 69 Department of Mechanical Engineering Naval Postgraduate School Monterey, California 93940	1
4.	Associate Professor T. M. Houlihan Code 69Hm, Department of Mechanical Engineering Naval Postgraduate School Monterey, California 93940	5
5.	Associate Professor A. Gerba, Jr. Code 62Gz, Department of Electrical Engineering Naval Postgraduate School Monterey, California 93940	1
6.	LCDR R. A. Kalyn, USN 314 Orange Plank Road Hampton, Virginia 23669	1
7.	Professor P. F. Pucci Code 69Pc, Department of Mechanical Engineering Naval Postgraduate School Monterey, California 93940	1

Thesis
K124 Kalyn
c.1
183876
An application of optimal control theory to the FEG-7 gas turbine propulsion system.
29 JUL 82
24 AUG 83
19 MAR 84
20 OCT 84
16 APR 87

Thesis
K124 Kalyn
c.1
183876
An application of optimal control theory to the FEG-7 gas turbine propulsion system.
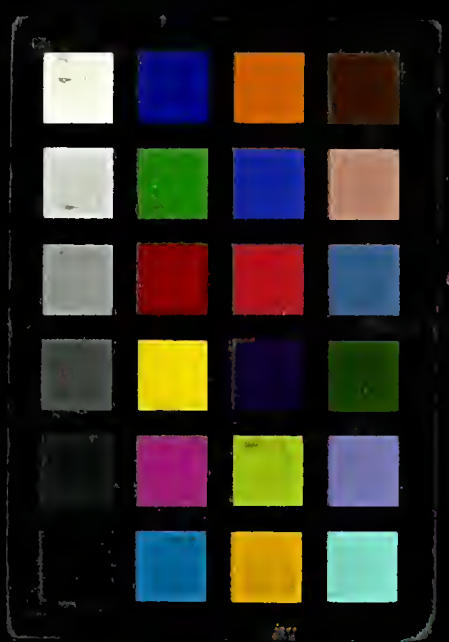
thesK124
An application of optimal control theory
3 2768 002 11377 1
DUDLEY KNOX LIBRARY